EVC890

Connection cable

VDOGF030MSS0005H03STAH030MSS

Please see the technical note under "Downloads"

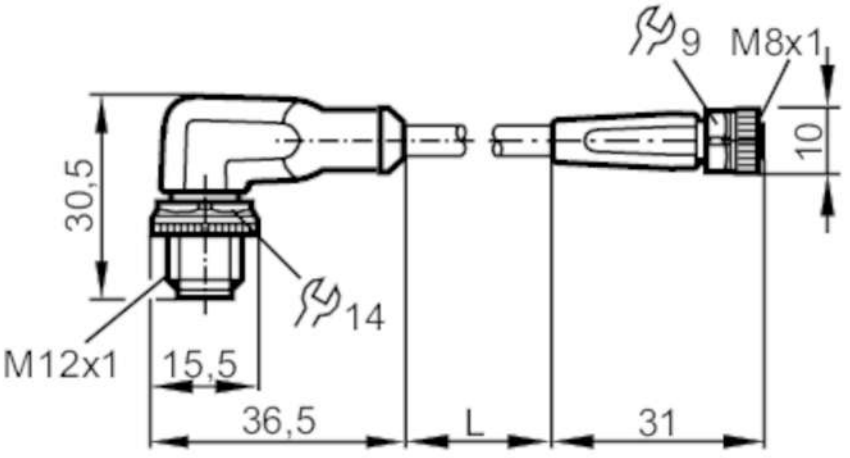

Application			
Special feature		Free from silicone; Halogen-free; Gold-plated contacts; Drag chain suitability	
Free from silicone		yes	
Electrical data			
Operating voltage	[V]	< 50 AC / < 60 DC	
Protection class		III	
Max. current load total	[A]	3	
Operating conditions			
Ambient temperature	[°C]	-25...90	
Ambient temperature (moving)	[°C]	-25...90	
Protection		IP 65; IP 67; IP 68; IP 69K	
Tests / approvals			
UL approval		Ta	75 °C
Mechanical data			
Weight	[g]	153.8	
Materials		housing: TPU orange; Sealing: FKM	
Material nut		brass, nickel-plated	
Drag chain suitability		yes	

EVC890

Connection cable

VDOGF030MSS0005H03STAH030MSS

Drag chain suitability	bending radius for flexible use	min. 10 x cable diameter
	travel speed	max. 3.3 m/s for a horizontal travel length of 5 m and max. acceleration of 5 m/s²
	bending cycles	> 5 Mio.
	torsional strain	± 180 °/m

Remarks

Notes	Please see the technical note under "Downloads"
Pack quantity	1 pcs.

Electrical connection - plug

Connector: 1 x M12, angled; coding: A; Locking: brass, nickel-plated; Contacts: gold-plated; Tightening torque: 0.6...1.5 Nm

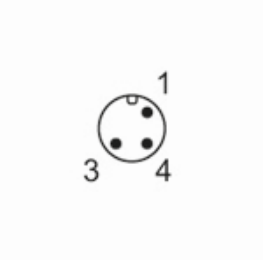

Electrical connection

Cable: 5 m, PUR, Halogen-free, black, Ø 4.3 mm; 3 x 0.34 mm² (42 x Ø 0.1 mm)

Connection

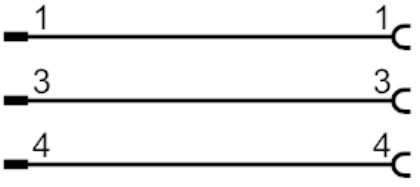

Electrical connection - socket

Connector: 1 x M8, straight; coding: A; Locking: brass, nickel-plated; Contacts: gold-plated; Tightening torque: 0.3...0.5 Nm

