REVISION HISTORY			
REV	DATE	BY	DESCRIPTION
M	08JAN2014	GRD/DGJ	PRN: P2014-0051

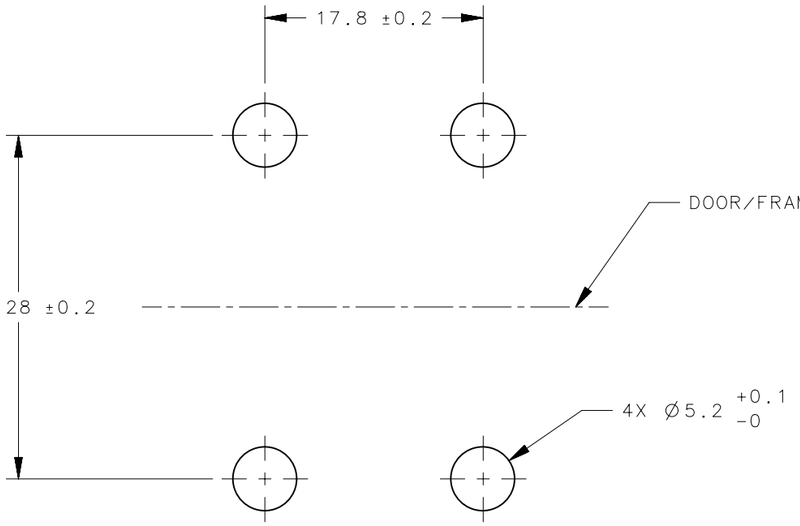

PANEL PREPARATION

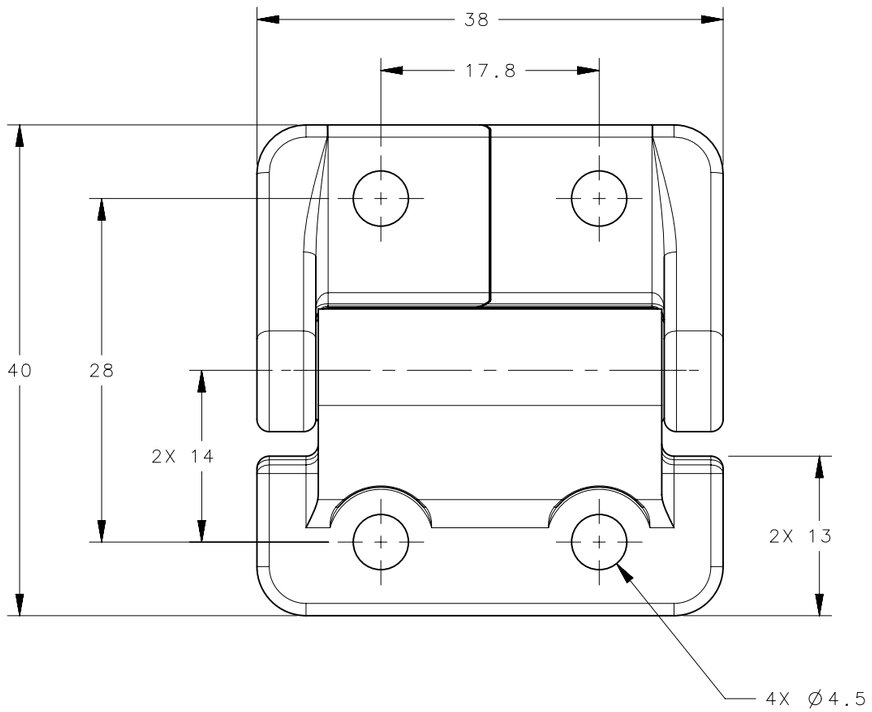

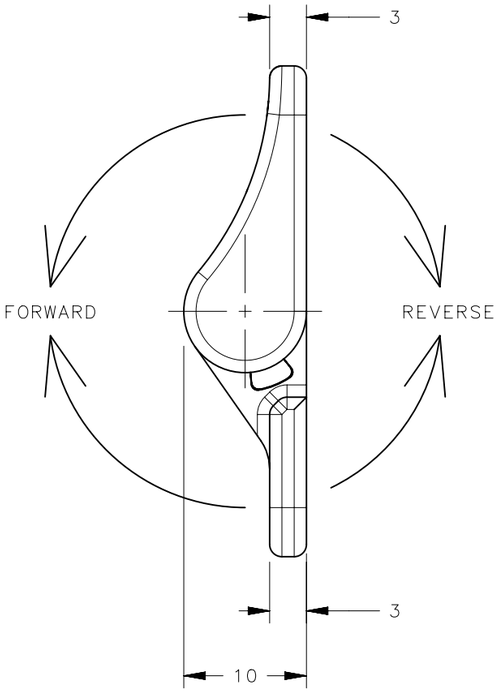

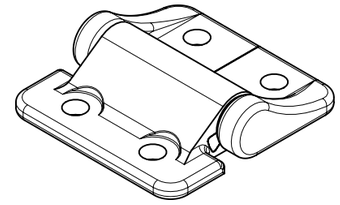

SCALE 1:1

PART NUMBER	FORWARD TORQUE	REVERSE TORQUE
E6-10-204-XX	0.45 N-m (4.0 in-lbs)	
E6-10-208-XX	0.9 N-m (8.0 in-lbs)	
E6-10-212-XX	1.4 N-m (12.0 in-lbs)	
E6-10-216-XX	1.8 N-m (16.0 in-lbs)	
E6-10-220-XX	2.3 N-m (20.0 in-lbs)	
E6-10-212F-XX	1.4 N-m (12.0 in-lbs)	0.8 N-m (7.2 in-lbs)
E6-10-216F-XX	1.8 N-m (16.0 in-lbs)	1.1 N-m (9.6 in-lbs)
E6-10-220F-XX	2.3 N-m (20.0 in-lbs)	1.4 N-m (12.0 in-lbs)
E6-10-224F-XX	2.8 N-m (24.0 in-lbs)	1.7 N-m (14.4 in-lbs)
E6-10-212R-XX	0.8 N-m (7.2 in-lbs)	1.4 N-m (12.0 in-lbs)
E6-10-216R-XX	1.1 N-m (9.6 in-lbs)	1.8 N-m (16.0 in-lbs)
E6-10-220R-XX	1.4 N-m (12.0 in-lbs)	2.3 N-m (20.0 in-lbs)
E6-10-224R-XX	1.7 N-m (14.4 in-lbs)	2.8 N-m (24.0 in-lbs)

PART NUMBER	DESCRIPTION	FINISH
E6-10-2XXX-63	ASSEMBLY - AS CAST	NATURAL
E6-10-2XXX-50	ASSEMBLY - COATED	BLACK

NOTES:

1. PERFORMANCE TORQUE TOLERANCE ±20%

2. DESIGNED TO ACCEPT M4 OR No. 8 SCREW OR EQUIVALENT

3. MATERIAL AND FINISH:
   HINGE LEAVES: DIE CAST ALUMINUM, SEE TABLE FOR FINISH
   SHAFT & PIN: STEEL
   O-RINGS: BUNA-N RUBBER
   BEARINGS: DIE CAST ZINC

PROPRIETARY ITEM
EXCEPT FOR USES EXPRESSLY GRANTED IN WRITING, INFORMATION DISCLOSED HEREON IS CONFIDENTIAL AND ALL RIGHTS, PATENT AND OTHERWISE, ARE RESERVED BY SOUTHCO, INC.

THIRD ANGLE PROJECTION

MILLIMETERS [IN]

TOLERANCES UNLESS OTHERWISE NOTED

ALL DIMENSIONS WITHOUT TOLERANCES ARE FOR REFERENCE ONLY.

PER ASME Y14.5M-1994

southco®
CONNECT·CREATE·INNOVATE

DESCRIPTION: E6-200 SERIES HINGE ASSEMBLY

SIZE	SYSTEM	DWG NO.
A3	NX	J-E6-10-2-50

DRAWN BY	DATE	SCALE	SHEET
ALS	20JUL2006	2:1	1 OF 1