Inductive Sensors

BES 516-300-S135-S4-D
Ordercode: BHS001L

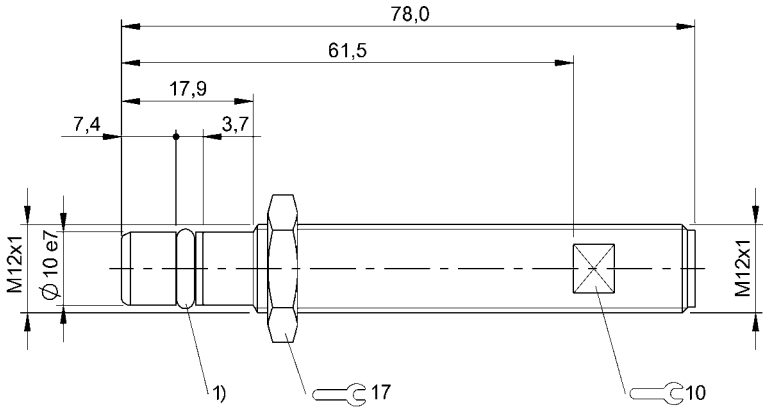

1) O-Ring with thrust ring

Display/Operation

Function indicator	no
Power indicator	no

Electrical connection

Connection	M12x1-Male, 4-pole, A-coded
Protection against device mix-ups	yes
Short-circuit protection	yes

Electrical data

Load capacitance max. at Ue	0.5 µF
No-load current Io max., undamped	1 mA
No-load current Io max., damped	10 mA
Operating voltage Ub	10…30 VDC
Output resistance Ra	33.0 kOhm + D
Polarity reversal protected	yes
Rated insulation voltage Ui	75 V DC
Rated operating current Ie	200 mA
Rated operating voltage Ue DC	24 V
Rated short circuit current	100 A
Ready delay tv max.	10 ms
Residual current Ir max.	10 µA
Residual ripple max. (% of Ue)	15 %
Switching frequency	1000 Hz
Utilization category	DC-13
Voltage drop static max.	1.5 V

Environmental conditions

Ambient temperature	-25…80 °C
Contamination scale	3
EN 60068-2-27, Shock	Half-sinus, 30 gn, 11 ms
EN 60068-2-6, Vibration	55 Hz, amplitude 1 mm, 3x30 min
IP rating	IP68

Functional safety

MTTF (40 °C)	720 a

General data

Approval/Conformity	CE cULus EAC
Basic standard	IEC 60947-5-2
Thrust ring, part number	705918

Material

Gasket, material	FPM 70
Housing material	Stainless steel (1.4104)
Material sensing surface	EP
Support ring material	PTFE

Mechanical data

Dimension	Ø 12 x 78 mm
Fastening detail	M12x1
Installation	for flush mounting
Pressure rating max.	500 bar
Pressure rating, note	oil pressure rated
Sealing ring, part number	636594
Sealing ring, size	5.85 × 2.4 mm
Size	M12x1
Tightening torque	15 Nm ±10 %

Inductive Sensors
BES 516-300-S135-S4-D
Ordercode: BHS001L

Output/Interface

Switching output	PNP Normally open (NO)

Range/Distance

Assured operating distance Sa	1.2 mm
Effective operating distance Sr	1.5 mm
Hysteresis H max. (% of Sr)	15.0 %
Rated operating distance Sn	1.5 mm
Repeat accuracy max. (% of Sr)	5.0 %
Temperature drift max. (% of Sr)	10 %
Tolerance Sr	±10 %

Remarks

Installation Instructions 614804
The sensor is functional again after the overload has been eliminated.

For further information about the MTTF and B10d see MTTF / B10d certificate

Indication of the MTTF- / B10d value does not represent a binding composition and/or life expectancy assurance; these are simply experiential values with no warranty implications. These declared values also do not extend the expiration period for defect claims or affect it in any way.

Connector view



Wiring Diagram

