Technical Data

	AS/S/24/110	AS/S/24/120
CE	06 2831 DoP0071	06 2831 DoP0073

Specification	24Vdc
Operation	Continuous
Operating Voltage Range	18 - 30Vdc
Sound output @1m	See table overleaf
Current Consumption	See table overleaf
Tones	44 - See table overleaf
Operating Temperature	-25°C to +70°C
Live Monitoring Method	Polarised Input
Construction	ABS FR Plastic Case
Ingress Protection	IP33C (IP66*)

Note: Polar dispersion information available in the technical manual. (Ref:M04-005)

***Device not EN54 certified to IP66. Manufacturer's declaration.**

Fire Alarm Device - Sounder for indoor (type A) and outdoor (type B) use

Essential Characteristics

Harmonized Technical Specification: EN54-3:2001+A1:2002+A2:2006

Clause(s)	Performance
4.2, 4.3, 5.2, 5.3	Pass
4.4, 4.5, 4.6, 5.4	Pass
5.5, 5.6, 5.7, 5.8, 5.9	Pass
5.8, 5.9, 5.10	Pass
5.11	Pass
5.12, 5.13, 5.14, 5.15	Pass
5.16	Pass
5.17	Pass

1. Installation

Knockout or drill required cable gland holes, and fix required cable glands.

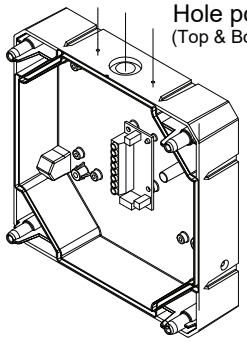

Hole positions for cable glands
(Top & Bottom)

NOTE: Ensure that the IP integrity is maintained during gland fitting.
(Take care not to disturb the electronics while drilling. Remove PCB if required)

2. Fixing Details

Fix base to wall in 4 positions.

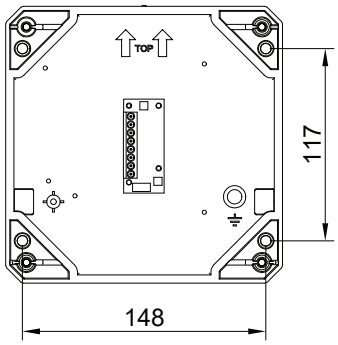

3. Connection Detail

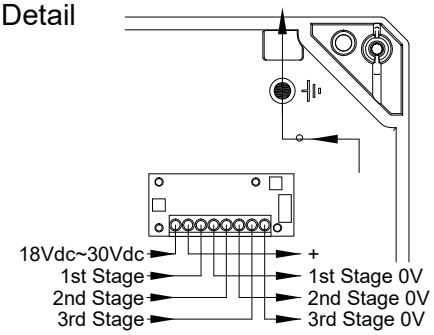

4. Sounder Settings

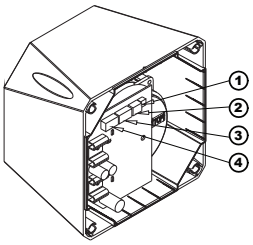

1. Volume Control



Turn dial clockwise to increase volume.
(20dB Range)

2. Switch 1 (Time out setting)



0 = Open
1 = Closed

BIT 123X	Minutes	BIT 123X	Minutes
111X	5	011X	25
110X	10	010X	30
101X	15	001X	40
100X	20	000X	∞

Switch 1 bit 4 is to select voice (0)/ no voice (1).

3. Switch 2 (Stage1 tone selection)

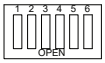

See table overleaf.

4. Switch 3 (Stage 2 tone selection)

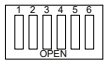

See table overleaf.
(Stage 3 Tone is dependent on the setting of switch 2)

5. Switch positions

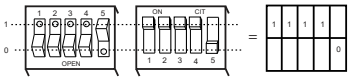

5. Sounder Assembly

Ensure that guide ribs are aligned.
(Top & Bottom)

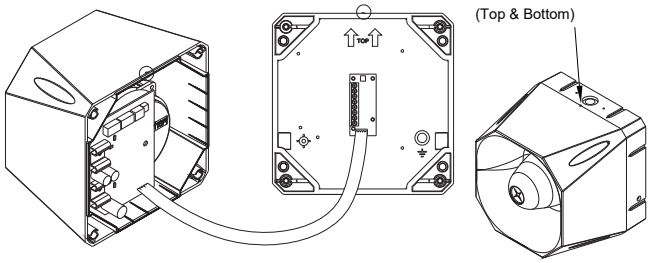

1. Plug the 5 way ribbon cable into the base header.
2. Ensure that the top indicator on the base is aligned with the top indicator on the sounder, and push the sounder onto the base.
3. Secure the sounder to the base using the bolts provided.

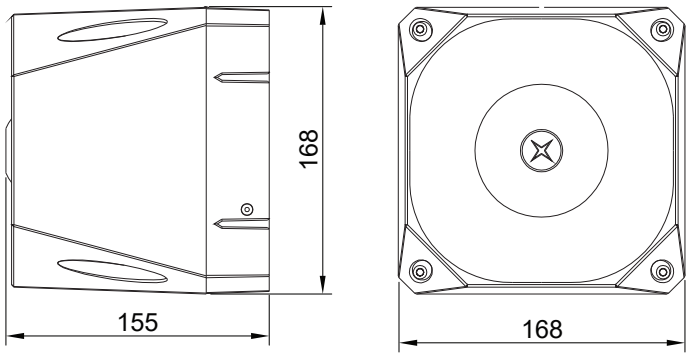

Asserta Sounder Tones Table

1st & 2nd Tone bank	3rd Tone bank	Switch Setting (0=Open)	Tone Description					Asserta 110			Asserta 120		
								Average current @ max vol @ 24VDC	24Vdc on axis @1M	EN54-3 30Vdc see notes	Average current @ max vol @ 24VDC	*24Vdc on axis @1M	EN54-3 30Vdc see notes
		123456	Pattern	Frequency (Hz)	Rate	Market	Depiction .	mA	dB(A)	dB(A)	mA	dB(A)	dB(A)
A 1	A14	111111	Alternating	970 then 800	2Hz (250ms-250ms)	EVIAN		108	111	*	450	117	*
A 2	A14	111110	Sweep	800 to 970	7Hz (7/s)			103	112	*	450	120	*
A 3	A14	111101	Sweep	800 to 970	1Hz (1/s)			105	112	112	450	120	116
A 4	A9	111100	Continuous	2850	Steady			122	106	*	445	109	*
A 5	A4	111011	Sweep	2400 to 2850	7Hz			119	103	*	447	109	*
A 6	A4	111010	Sweep	2400 to 2850	1Hz			121	105	*	446	110	*
A 7	A14	111001	Slow whoop	500 to 1200	3s sweep, 0.5 s silence, then repeat (rep)	Slow Whoop Netherlands		115	111	112	340	119	116
A 8	A14	111000	Sweep (DIN)	1200 to 500	1Hz	Din / PFEER (PAPA)		115	111	112	430	119	116
A 9	A4	110111	Alternating	2850 then 2400	2Hz (250ms-250ms)			121	108	*	450	112	*
A 10	A14	110110	Intermittent	970	0.5Hz (1s On/1s Off)	PFEER alert		71	108	*	229	117	*
A 11	A14	110101	Alternating	970 then 800	1Hz (500ms-500ms)			106	109	*	375	116	*
A 12	A4	110100	Intermittent	2850	0.5Hz (1s On/1s Off)			89	107	*	235	109	*
A 13	A14	110011	Intermittent	970	0.8Hz (250ms On/1s Off)	ASP		35	108	*	100	117	*
A 14	A8	110010	Continuous	970	Steady	PFEER - Toxic gas		104	109	111	450	117	115
A 15	A14	110001	Alternating	440 then 554	100ms-400ms	France NFS 32 S 32-001		76	106	*	294	115	*
A 16	A14	110000	Intermittent	660	3.3Hz (150ms On/150msOff)	Swedish (Air raid)		60	106	*	232	114	*
A 17	A14	101111	Intermittent	660	0.28Hz(1.8s On/1.8s Off)	Swedish (Local warning)		88	106	*	220	115	*
A 18	A14	101110	Intermittent	660	0.05Hz (6.5s On/13s Off)	Swedish (Pre-mess)		101	106	*	150	115	*
A 19	A1	101101	Continuous	660	Steady	Swedish (All clear)		103	107	*	429	116	*
A 20	A19	101100	Alternating	440 then 554	0.5Hz (1s On/1s Off)	Swedish (Turn out)		83	106	*	312	115	*
A 21	A4	101011	Intermittent	660	1Hz (500ms-500ms)	Swedish		66	106	*	220	115	*
A 22	A4	101010	Intermittent	2850	4Hz (150ms On/100ms Off)			83	105	*	286	108	*
A 23	A14	101001	Sweep	800 to 970	50Hz			102	109	*	419	117	*
A 24	A4	101000	Sweep	2400 to 2850	50Hz			120	106	*	440	110	*
A 25	A14	100111	Intermittent	970	3 x 500ms pulses followed by 1.5s silence then repeat	ISO 8201/US Temporal		62	109	*	180	117	*
A 26	A4	100110	Intermittent	2850	3 x 500ms pulses followed by 1.5s silence then repeat	ISO 8201/US Temporal		64	107	*	180	109	*
A 27	A6	100101	Continuous	4000	Steady			109	101	*	450	105	*
A 28	A14	100100	Alternating	970 then 800	2Hz (250ms-250ms)			106	109	*	414	116	*
A 29	A14	100011	Alternating	990 then 650	2Hz (250ms-250ms) (Symphoni tones)			104	109	111	444	117	115
A 30	A14	100010	Alternating	510 then 610	2Hz (250ms-250ms) (Squashni Micro tones)			96	107	109	370	116	113
A 31	A14	100001	Sweep	300 to 1200	1Hz			84	110	*	285	118	*
A32	A3	100000	Continuous	Bell	Steady	See attached for waveform details		120	111	*	450	117	*
A33	A14	11111	Intermittent	Bell	3 x 500ms pulses followed by 1.5s silence then repeat	Bell / US temporal		69	111	*	180	117	*
A34	A4	11110	Alternating	1000 then 2000	1Hz (500ms-500ms)	Singapore		112	107	*	450	115	*
A35	A14	11101	Intermittent	420	6 step ramped start pulsed @ 0.625S ON/0.625S OFF	Australian alert		46	108	*	140	116	*
A36	A14	11100	Sweep	500 to 1200	Sweep 3.75s followed by 0.25s gap	Australian evac		91	109	*	340	117	*
A37	A14	11011	Sweep	1400 to 1600	Sweep up 1s, sweep down 0.5s	NF C 48-265		122	108	*	448	116	*
A38	A14	11010	Sweep	500 to 1200	Sweep UP & DOWN over 3s	Siren		94	109	*	310	117	*
A39	A14	11001	Intermittent	720	0.7s ON, 0.3OFF	German ind alarm		90	110	*	310	117	*
A40	A14	11000	Sweep	422 to 775	Sweep for 0.85s, 1s delay, repeat	NFPA Whoop		60	109	*	180	118	*
A41	A3	10111	Continuous	470	Steady	Horn (USA)		85	104	*	340	114	*
A42	A3	10110	Continuous	370	Steady	Air horn (USA)		76	104	*	272	113	*

Note (a): Tones approved under the Construction Products Regulation for Fire Alarm Applications, are shown in the column marked EN54-3.
Note (b): EN54-3 measurements shown reflect minimum expected SPL readings at Maximum Volume at the Loudest Point around the EN54-3 defined sounder axis.
Note (c): All other tone measurements reflect manufacturers data based on 'on axis' measurements, and are not verified by a Notified body.
Note (d): Detailed EN54-3 polar SPL measurements are available in the Product Manual for the appropriate sounder.
Note (e): All measurements taken at 20°C operating temperature.

Powering Business Worldwide

Eaton Electrical Products Ltd.
Llantarnam Park
Cwmbran
NP44 3AW
Tel: +44 (0) 1633 628500
Fax: +44 (0) 1633 866346

Eaton
EMEA Headquarters
Route de la Longeraie 7
1110 Morges, Switzerland
Eaton.eu
TEL: +44 (0) 1302 321541
FAX: +44 (0) 1302 303220
Firesales@eaton.com
Firetechsupport@eaton.com

© 2021 Eaton
All Rights Reserved
Eaton is a registered trademark.

All trademarks are property
of their respective owners.
www.eaton.com