



Model Number

OBG5000-R100-2EP-IO-V31

Retroreflective sensor (glass)
with 4-pin, M8 x 1 connector

Features

- Miniature design with versatile mounting options
- Detects transparent objects, i.e., clear glass, PET and transparent films
- Two machines in one: clear object detection or reflection operating mode with long range
- High degree of protection IP69K
- IO-link interface for service and process data

Product information

The R100 series miniature optical sensors are the first devices of their kind to offer an end-to-end solution in a small single standard design — from thru-beam sensor through to a distance measurement device. As a result of this design, the sensors are able to perform practically all standard automation tasks.
The entire series enables sensors to communicate via IO-Link.
The DuraBeam laser sensors are durable and can be used in the same way as a standard sensor.
The use of Multi Pixel Technology gives the standard sensors a high level of flexibility and enables them to adapt more effectively to their operating environment.

Dimensions

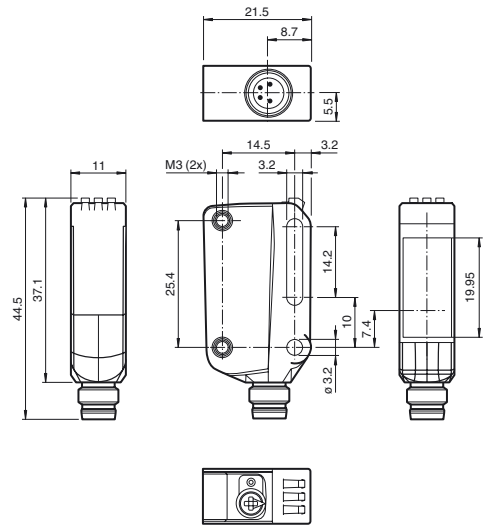

Electrical connection

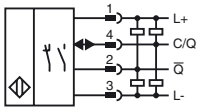

Pinout



Wire colors in accordance with EN 60947-5-2

1	BN	(brown)
2	WH	(white)
3	BU	(blue)
4	BK	(black)

Indicators/operating means

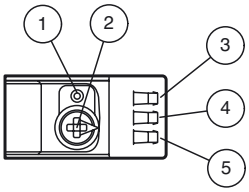

1	Teach-in button
2	Mode rotary switch
3	Operating indicator / dark on
4	Signal indicator
5	Operating indicator / light on

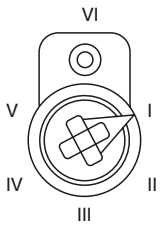

I	Mode N - normal mode
II	Mode I - 10 % contrast detection
III	Mode II - 18 % contrast detection
IV	Mode III - 40 % contrast detection
V	Switching type
VI	Keylock

Release date: 2016-06-20 12:55 Date of issue: 2016-06-20 267075-100028_eng.xml

Technical data

General specifications		
Effective detection range		0 ... 3.5 m in TEACH mode ; 0 ... 5 m at switch position "N"
Reflector distance		0 ... 3.5 m in TEACH mode ; 0 ... 5 m at switch position "N"
Threshold detection range		6 m
Reference target		H85-2 reflector
Light source		LED
Light type		modulated visible red light
LED risk group labelling		exempt group
Diameter of the light spot		approx. 300 mm at a distance of 3.5 m
Angle of divergence		approx. 5 °
Ambient light limit		EN 60947-5-2
Functional safety related parameters		
$MTTF_d$		600 a
Mission Time (T_M)		20 a
Diagnostic Coverage (DC)		0 %
Indicators/operating means		
Operation indicator		LED green: constantly on - power on flashing (4Hz) - short circuit flashing with short break (1 Hz) - IO-Link mode
Function indicator		Yellow LED: Permanently lit—light path clear Permanently off—object detected Flashing (4 Hz)—operating reserve not reached
Control elements		Teach-In key
Control elements		5-step rotary switch for operating modes selection
Contrast detection levels		10 % - clean, water filled PET bottles 18 % - clear glass bottles 40 % - colored glass or opaque materials Adjustable via rotary switch
Electrical specifications		
Operating voltage	U_B	10 ... 30 V DC
Ripple		max. 10 %
No-load supply current	I_0	< 25 mA at 24 V supply voltage
Protection class		III
Interface		
Interface type		IO-Link (via C/Q = pin 4)
Transfer rate		COM 2 (38.4 kBaud)
IO-Link Revision		1.1
Min. cycle time		2.3 ms
Process data witdh		Process data input 2 Bit Process data output 2 Bit
SIO mode support		yes
Device ID		0x110A01 (1116673)
Compatible master port type		A
Output		
Switching type		The switching type of the sensor is adjustable. The default setting is: C/Q - Pin4: NPN normally open / dark-on, PNP normally closed / light-on, IO-Link /Q - Pin2: NPN normally closed / light-on, PNP normally open / dark-on
Signal output		2 push-pull (4 in 1)outputs, short-circuit protected, reverse polarity protected, overvoltage protected
Switching voltage		max. 30 V DC
Switching current		max. 100 mA , resistive load
Usage category		DC-12 and DC-13
Voltage drop	U_d	≤ 1.5 V DC
Switching frequency	f	500 Hz
Response time		1 ms
Ambient conditions		
Ambient temperature		-20 ... 60 °C (-4 ... 140 °F)
Storage temperature		-40 ... 70 °C (-40 ... 158 °F)
Mechanical specifications		
Degree of protection		IP67 / IP69 / IP69K
Connection		M8 x 1 connector, 4-pin
Material		
Housing		PC (Polycarbonate)
Optical face		PMMA
Mass		approx. 10 g
Compliance with standards and directives		
Directive conformity		
EMC Directive 2004/108/EC		EN 60947-5-2:2007+A1:2012
Standard conformity		

Accessories

V31-WM-2M-PUR
Female cordset, M8, 4-pin, PUR cable

V31-GM-2M-PUR
Female cordset, M8, 4-pin, PUR cable

REF-H85-2
Reflector, rectangular 84.5 mm x 84.5 mm, mounting holes

REF-H50
Reflector, rectangular 51 mm x 61 mm, mounting holes, fixing strap

REF-H33
Reflector with screw fixing

IO-Link-Master02-USB
IO-Link master, supply via USB port or separate power supply, LED indicators, M12 plug for sensor connection

OFR-100/100
Reflective tape 100 mm x 100 mm

Other suitable accessories can be found at www.pepperl-fuchs.com

Release date: 2016-06-20 12:55 Date of issue: 2016-06-20 267075-100028_eng.xml

Refer to "General Notes Relating to Pepperl+Fuchs Product Information".
Pepperl+Fuchs Group www.pepperl-fuchs.com
USA: +1 330 486 0001 fa-info@us.pepperl-fuchs.com
Germany: +49 621 776 4411 fa-info@de.pepperl-fuchs.com
Singapore: +65 6779 9091 fa-info@sg.pepperl-fuchs.com
PEPPERL+FUCHS SENSING YOUR NEEDS

Product standard	EN 60947-5-2:2007+A1:2012 IEC 60947-5-2:2007 + A1:2012
Standards	UL 60947-5-2: 2014 IEC 61131-9:2013 EN 62471:2008 EN 61131-9:2013

Approvals and certificates

UL approval	E87056 , cULus Listed , class 2 power supply , type rating 1

Curves/Diagrams

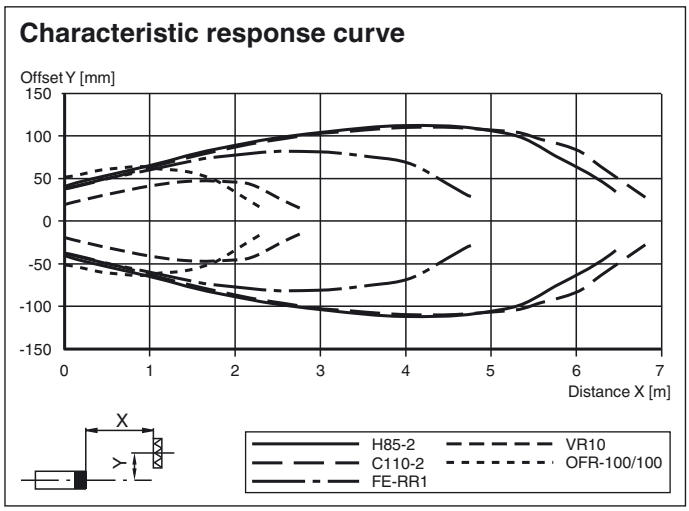

Relative received light strength in switch position "N"

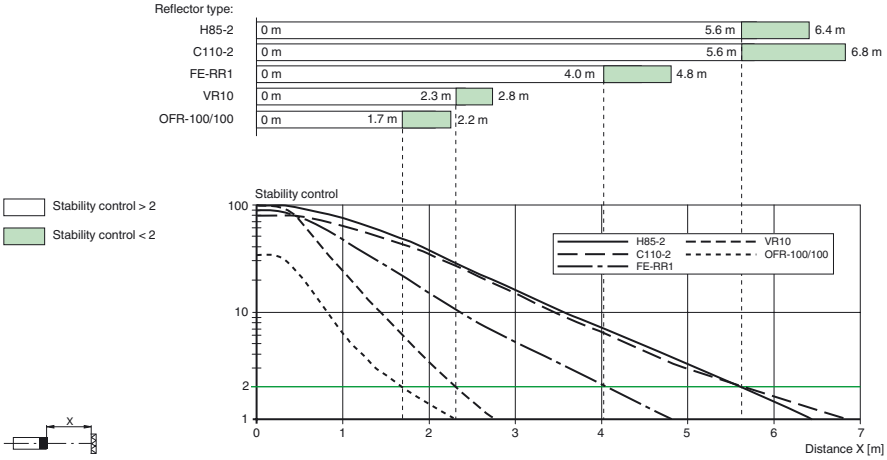

Settings

Teach-in:

Use the rotary switch to select the required operating mode: Normal mode (N) or contrast level I – III.

To teach in a threshold or activate an operating mode, press the "TI" button until the yellow and green LEDs flash in phase (approx. 1 s).

Release the "TI" button. Teach-in starts.

Successful teach-in is indicated by alternating flashing (2.5 Hz) of the yellow and green LEDs. The sensor will now operate in the selected operating mode with the taught-in threshold.

An unsuccessful teach-in is indicated by rapidly alternating flashing (8 Hz) of the yellow and green LEDs. After an unsuccessful teach-in, the sensor continues to operate with the previous valid setting after the relevant visual fault signal is issued.

Every taught-in switching threshold can be re-taught (overwritten) by pressing the "TI" button again.

Note: To ensure that the device functions reliably in Contrast mode, the device must be powered on at least 30 s before Teach-in.

Setting the Device to Maximum Sensitivity
Use the rotary switch to select the Normal mode (N) position.
Press the "TI" button for > 4 s. The yellow and green LEDs will go out.
Release the "TI" button.
The settings will be reset to maximum sensitivity. After successfully resetting, the yellow and green LEDs will flash alternately (2.5 Hz).

Switching between light on/dark on
Use the rotary switch to select the light on/dark on (L/D) position.
Press the "TI" button for > 1 s.
The respective operating indicator LED (L/D) will illuminate green and the switching type will change.

Release date: 2016-06-20 12:55 Date of issue: 2016-06-20 267075-100028_eng.xml

To reset the switching type, press the "TI" button for > 4 s.
The respective operating indicator LED (L/D) will illuminate green and the operating indicator will be reset to the most recently active switching type.

Reset to Default Settings

Use the rotary switch to select the O position.
Press the "TI" button for > 10 s. The yellow and the green LEDs will both switch off.
Release the "TI" button. The yellow LED is on.
After resetting, the sensor will operate with the following default settings:

- Normal mode (N)
- Maximum sensitivity adjustment
- Dark on
- Pin 2 (white core): antivalent switching output

Release date: 2016-06-20 12:55 Date of issue: 2016-06-20 267075-100028_eng.xml

Refer to “General Notes Relating to Pepperl+Fuchs Product Information”.
Pepperl+Fuchs Group www.pepperl-fuchs.com
USA: +1 330 486 0001 fa-info@us.pepperl-fuchs.com
Germany: +49 621 776 4411 fa-info@de.pepperl-fuchs.com
Singapore: +65 6779 9091 fa-info@sg.pepperl-fuchs.com
PEPPERL+FUCHS SENSING YOUR NEEDS