MODEL NO.	"L"	P/N
PIP46U	2000 [79]	26083
PIP415U	4572 [180]	27351
PIP430U	9144 [360]	27557

*PROBE LENGTHS LESS THAN 50mm [2inches] ARE NOT BENDABLE.

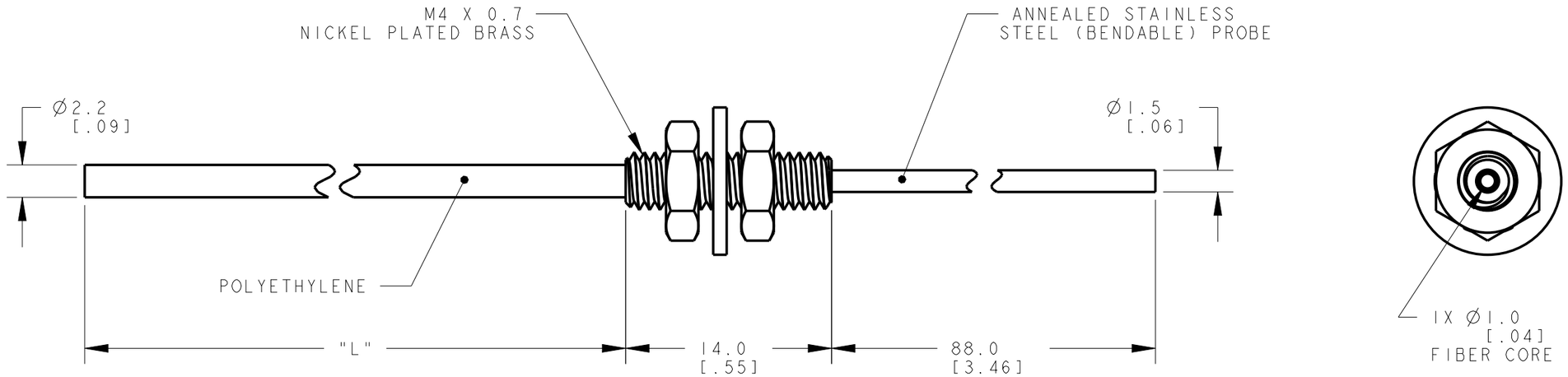

NOTES:
1. ALL DIMENSIONS ARE MILLIMETERS [INCHES] UNLESS OTHERWISE NOTED.
2. REFER TO "www.bannerengineering.com" FOR ADDITIONAL DATA AND SPECIFICATIONS.

This drawing is the property of BANNER ENGINEERING CORP. Any use or reproduction, in any form, without prior written permission of Banner is prohibited.
© 2015 Banner Engineering Corp.

THIRD ANGLE PROJECTION

BANNER ENGINEERING CORP.
www.bannerengineering.com

TITLE

PIP4 SERIES UNTERMINATED

SIZE	DRAWING NO.	REV.
B	192784	A
SCALE 3:1	SHEET 1 OF 1	

CREO