MURR ELEKTRONIK
stay connected

EMPARRO CAP BUFFER MODULE

IN: 24VDC OUT: 24VDC/20A for max. 1A/40s

INPUT: 24 V DC (SELV/PELV)
OUTPUT: max. 20 A
Buffer time: 1.0 s

Link to Product

Illustration



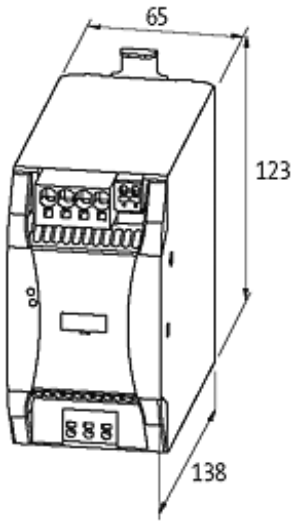

The information in this brochure has been compiled with the utmost care.
Liability for the correctness completeness and topicality of the information is restricted to gross negligence. Version: 01/18

MURR ELEKTRONIK

stay connected

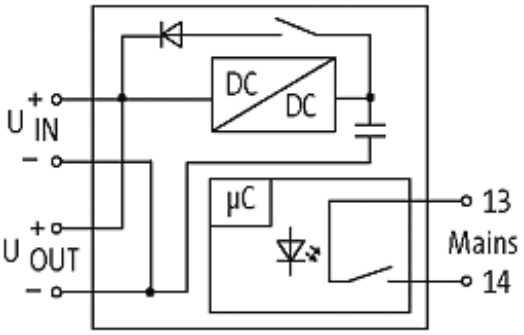

Product may differ from Image

Approvals

c UL us Listed

Input

Input voltage	21.6...26.4 V DC
Input current	20 A
Inrush current	max. 25 A
Loading time	max. 75 s
Loading current	max. 3 A

General data

Standards	EN 61000-6-2, EN 61000-6-4
Dimensions H × W × D	123×65×138 mm
Mounting method	DIN-rail mountable TH35-7.5/TH35-15 (EN 60715)
Efficiency	min. 90%
Temperature range	-40...+60 °C (storage temperature -40...+60 °C)

Output

Output voltage	25.5...19 V DC ±2%
Output current	max. 20 A
Current limit	65 A
Buffer time	1.0 s (20 A); 40 s (1 A)

Commercial data

country of origin	DE
customs tariff number	85322900
EAN	4048879436700
eClass	27049190
Packaging unit	1

The information in this brochure has been compiled with the utmost care.
Liability for the correctness completeness and topicality of the information is restricted to gross negligence. Version: 01/18