E40171

COMBICON connector

COMBICON PLUG / QUANTITY 5

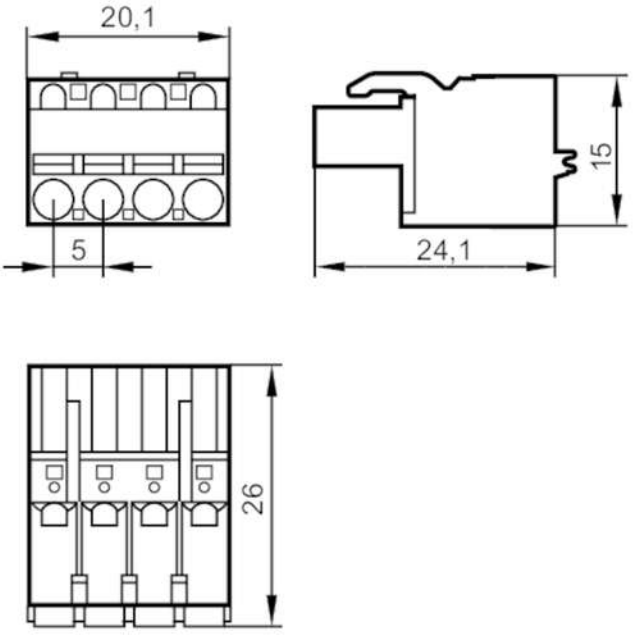

Electrical data		
Contact resistance	[mΩ]	1.5; (2,5 mm²)
Max. load current	[A]	12; (2,5 mm²)
Mechanical data		
Weight	[g]	34.85
Materials		current carrying parts: copper alloy tin-plated
Remarks		
Pack quantity		5 pcs.