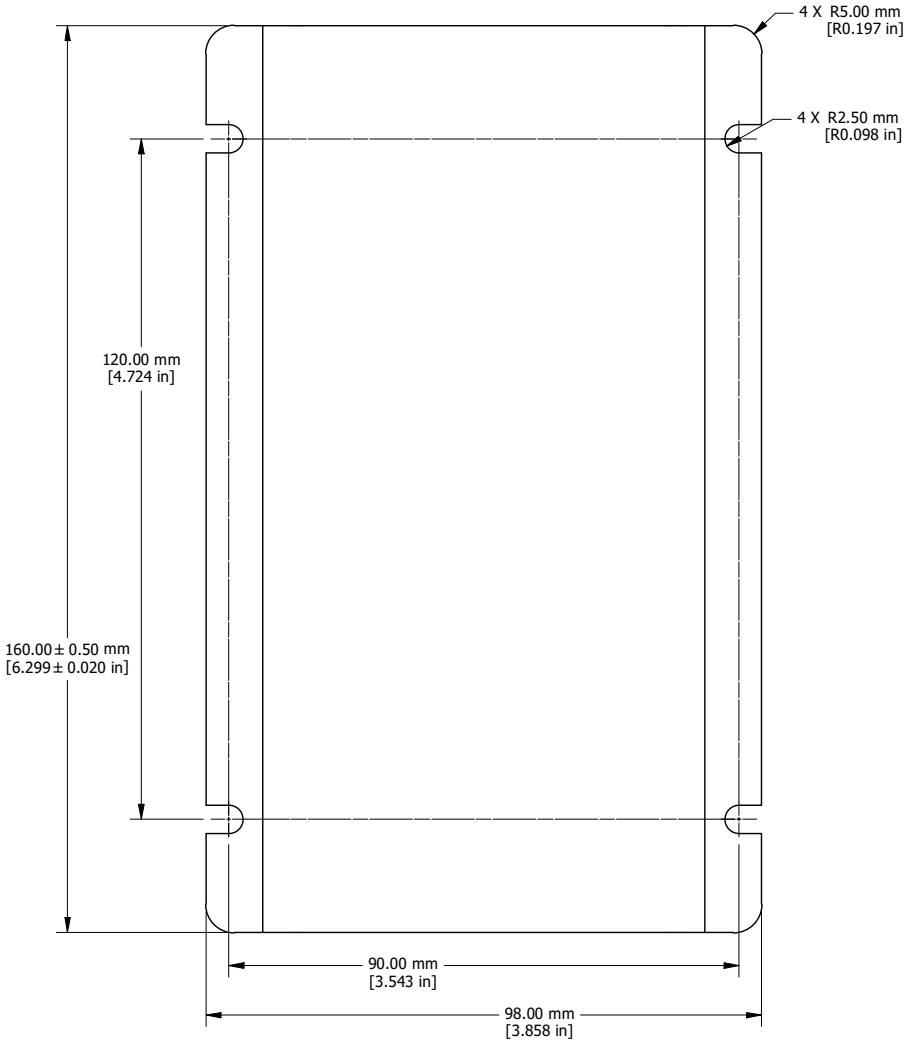

EXTRUSION

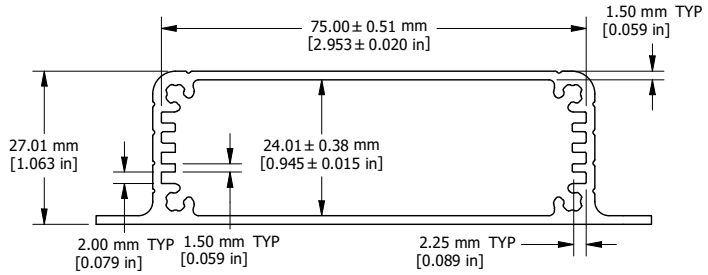

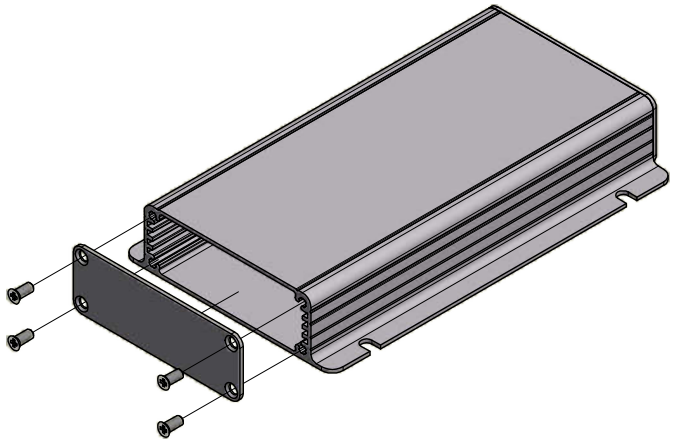

EXPLODED ASSEMBLY VIEW

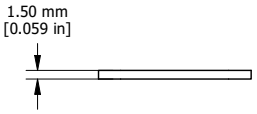

END PLATE

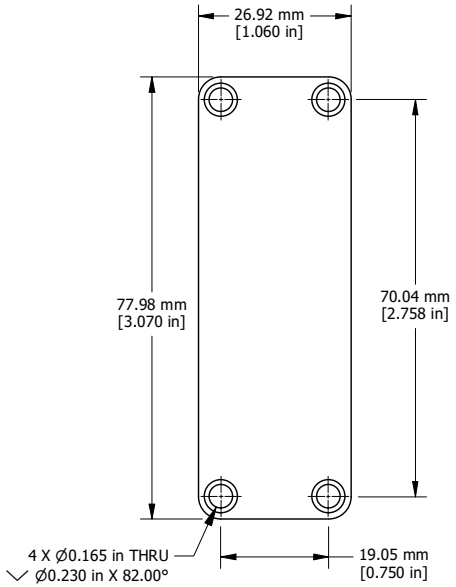

EXTRUSION DESIGNED FOR
75MM WIDE PC BOARD

Enclosures can be Factory Modified (Milling, Drilling, Printing etc.)
Solid models of this enclosure available in STEP or IGES.
Contact Factory mjm@hammondmfg.com

NOTE
Purchased assembly includes box, #6 Taptight screws and end panels
Box made from Extruded Aluminum 6063.

1455JF1601	
PART NUMBERS	
Clear Anodized	1455JF1601
Black Anodized	1455JF1601BK
ACCESSORIES	
See website for accessories.	

HAMMOND MANUFACTURING™

1455JF1601

www.hammondmfg.com