# Compact cylinder ISO 21287, Series CCI

**R422001404**

## AVENTICS Series CCI Compact cylinders (ISO 21287)

The AVENTICS Series CCI (ISO 21287) cylinders stand for innovative, compact construction and an easy to clean design. The Series CCI (ISO 21287) is ideal for long strokes and increased requirements for optimized cycle times and moving masses. The sensors can be installed quickly and easily on all sides and over the entire cylinder lengths.






## Technical data

| | |
|---|---|
| Industry | Industrial |
| Standards | ISO 21287 |
| Piston Ø | 25 mm |
| Stroke | 10 mm |
| Ports | M5 |
| Functional principle | Single-acting, retracted without pressure |
| Cushioning | Elastic cushioning |
| Magnetic piston | Piston with magnet |
| Environmental requirements | Industry standard |
| Piston rod thread - type | Internal thread |
| Piston rod thread | M6 |
| Piston rod | single |
| Scraper | Standard Industry Scraper |
| Pressure for determining piston forces | 6,3 bar |
| Retracting piston force | 25 N |
| Extracting piston force | 284 N |
| Min. ambient temperature | -20 °C |
| Max. ambient temperature | 80 °C |
| Min. working pressure | 1.5 bar |

| | |
|---|---|
| Max. working pressure | 10 bar |
| Impact energy | 0.2 J |
| Weight 0 mm stroke | 0.126 kg |
| Weight +10 mm stroke | 0.026 kg |
| Stroke max. | 25 mm |
| Medium | Compressed air |
| Min. medium temperature | -20 °C |
| Max. medium temperature | 80 °C |
| Max. particle size | 50 µm |
| Min. oil content of compressed air | 0 mg/m³ |
| Max. oil content of compressed air | 5 mg/m³ |

## Material

| | |
|---|---|
| Piston rod | Stainless Steel |
| Scraper material | Polyurethane |
| Seal material | Polyurethane |
| Material, front cover | Aluminum |
| Cylinder tube | Aluminum |
| End cover | Aluminum |
| Part No. | R422001404 |

## Technical information

With cylinders with a piston rod extension, dimensions "WH" and "ZB" are increased by the value of the piston rod extension.

The pressure dew point must be at least 15 °C less than ambient and medium temperature and may not exceed 3 °C.

The oil content of compressed air must remain constant during the life cycle.

Use only the approved oils from AVENTICS. Further information can be found in the “Technical information” document (available in https://www.emerson.com/en-us/support).

## Dimensions

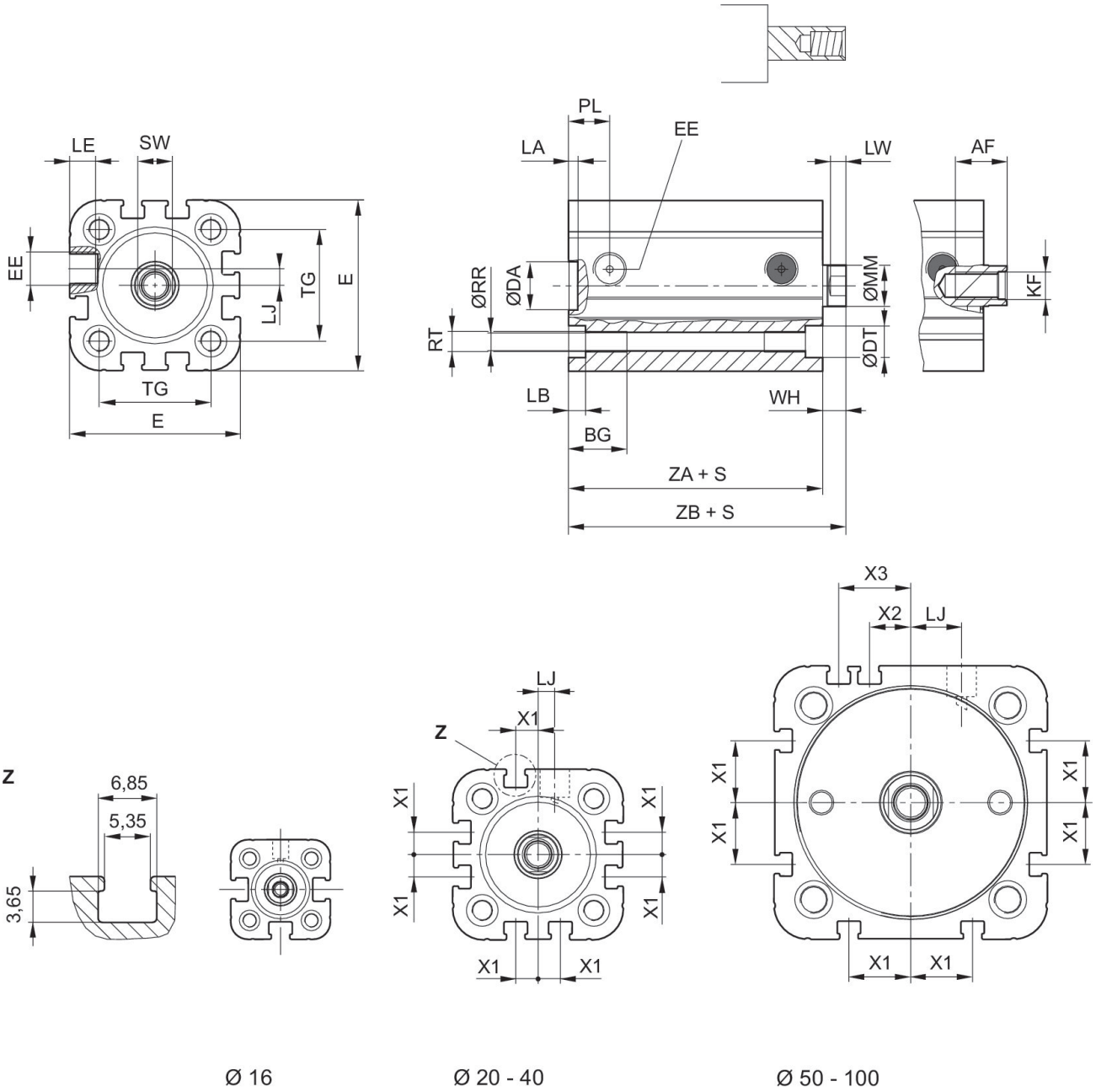


Ø 16 Ø 20 - 40 Ø 50 - 100

S = stroke

| Piston Ø | AF | BG | DA H11 | DT | E | EE | KF | KV | LA |
|---|---|---|---|---|---|---|---|---|---|
| 16 | 10 | 15 | 10 | 6 | 29.3 | M5 | M4 | 10 | 2.5 |
| 20 | 12 | 15.5 | 12 | 7.5 | 36.3 | M5 | M6 | 13 | 2.5 |
| 25 | 12 | 15.5 | 12 | 8 | 40.3 | M5 | M6 | 13 | 2.5 |
| 32 | 12 | 17 | 14 | 8.6 | 50 | G 1/8 | M8 | 17 | 2.5 |
| 40 | 12 | 17 | 14 | 9.2 | 58 | G 1/8 | M8 | 17 | 2.5 |
| 50 | 16 | 17 | 18 | 11 | 68.3 | G 1/8 | M10 | 19 | 2.5 |

# Compact cylinder ISO 21287, Series CCI

R422001404

| Piston Ø | AF | BG | DA H11 | DT | E | EE | KF | KV | LA |
|---|---|---|---|---|---|---|---|---|---|
| 63 | 16 | 17 | 18 | 11 | 80 | G 1/8 | M10 | 19 | 2.5 |
| 80 | 20 | 20 | 23 | 15 | 96 | G 1/8 | M12 | 24 | 3 |
| 100 | 20 | 20 | 28 | 15 | 116 | G 1/8 | M12 | 24 | 3 |

| Piston Ø | LB | LE | LJ | MM f8 | PL | RR | RT 6H | SW | TG |
|---|---|---|---|---|---|---|---|---|---|
| 16 | 3.5 | 4.5 | 0 | 8 | 8 | 3.3 | M4 | 7 | 18 |
| 20 | 4.5 | 4.5 | 4.5 | 10 | 10 | 4.2 | M5 | 8 | 22 |
| 25 | 4.5 | 4.5 | 4 | 10 | 10 | 4.2 | M5 | 8 | 26 |
| 32 | 5 | 7.5 | 4.85 | 12 | 12 | 5.1 | M6 | 10 | 32.5 |
| 40 | 5 | 7.5 | 9.85 | 12 | 12 | 5.1 | M6 | 10 | 38 |
| 50 | 5 | 7.5 | 12 | 16 | 12 | 6.7 | M8 | 13 | 46.5 |
| 63 | 5 | 7.5 | 14.8 | 16 | 12 | 6.7 | M8 | 13 | 56.5 |
| 80 | 5 | 7.5 | 22 | 20 | 14 | 8.5 | M10 | 16 | 72 |
| 100 | 5 | 7.5 | 27 | 25 | 16.5 | 8.5 | M10 | 21 | 89 |

| Piston Ø | WH | X1 | X2 | X3 | ZA | ZB |
|---|---|---|---|---|---|---|
| 16 | 4,8 ±0,9 | – | – | – | 34,9 | 39,7 ±0,8 |
| 20 | 5,6 ±0,9 | 4.2 | – | – | 37,3 | 43,6 ±0,8 |
| 25 | 5,6 ±0,9 | 4.5 | – | – | 39 | 44,5 ±0,9 |
| 32 | 7,4 ±0,9 | 6.5 | – | – | 44 | 51,4 ±1 |
| 40 | 7,4 ±0,9 | 11 | – | – | 45 | 52,4 ±1 |
| 50 | 8,4 ±0,9 | 13 | 4 | 13 | 45,5 | 53,6 ±1 |
| 63 | 8,5 ±0,9 | 18 | 12 | 21 | 49 | 57,4 ±1 |
| 80 | 9,8 ±1 | 18 | 16.5 | 25.5 | 54,7 | 64,4 ±1 |
| 100 | 9,8 ±1 | 20 | 20 | 29 | 67 | 76,7 ±1 |

## Maximum admissible lateral force dynamic

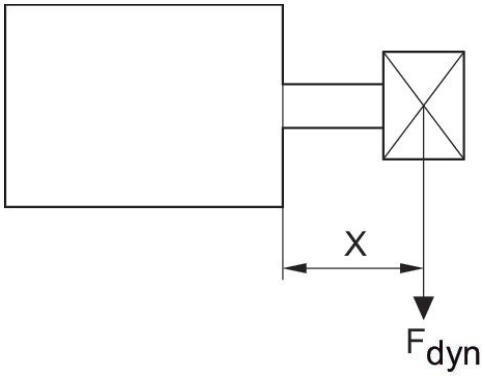


F dyn. = dynamic lateral force
X = distance between force application point and cylinder cover
S = stroke

## Maximum admissible lateral force dynamic

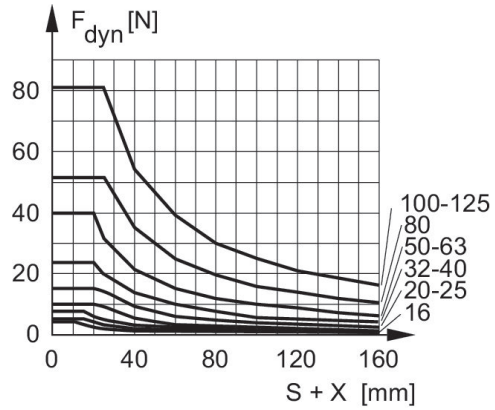


F dyn. = dynamic lateral force
X = distance between force application point and cylinder cover
S = stroke

## Maximum admissible lateral force static

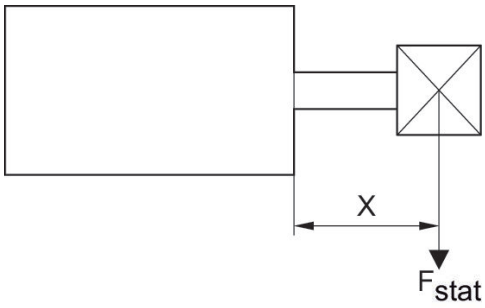


F stat. = static lateral force
X = distance between force application point and cylinder cover

## Maximum admissible lateral force static

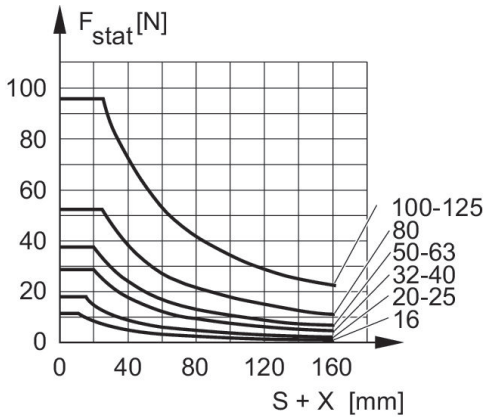


F stat. = static lateral force
X = distance between force application point and cylinder cover
S = stroke

## Extracting piston force

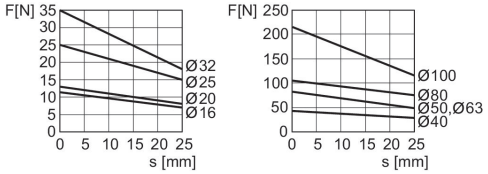


F = spring return force, s = return stroke

## Overview drawing

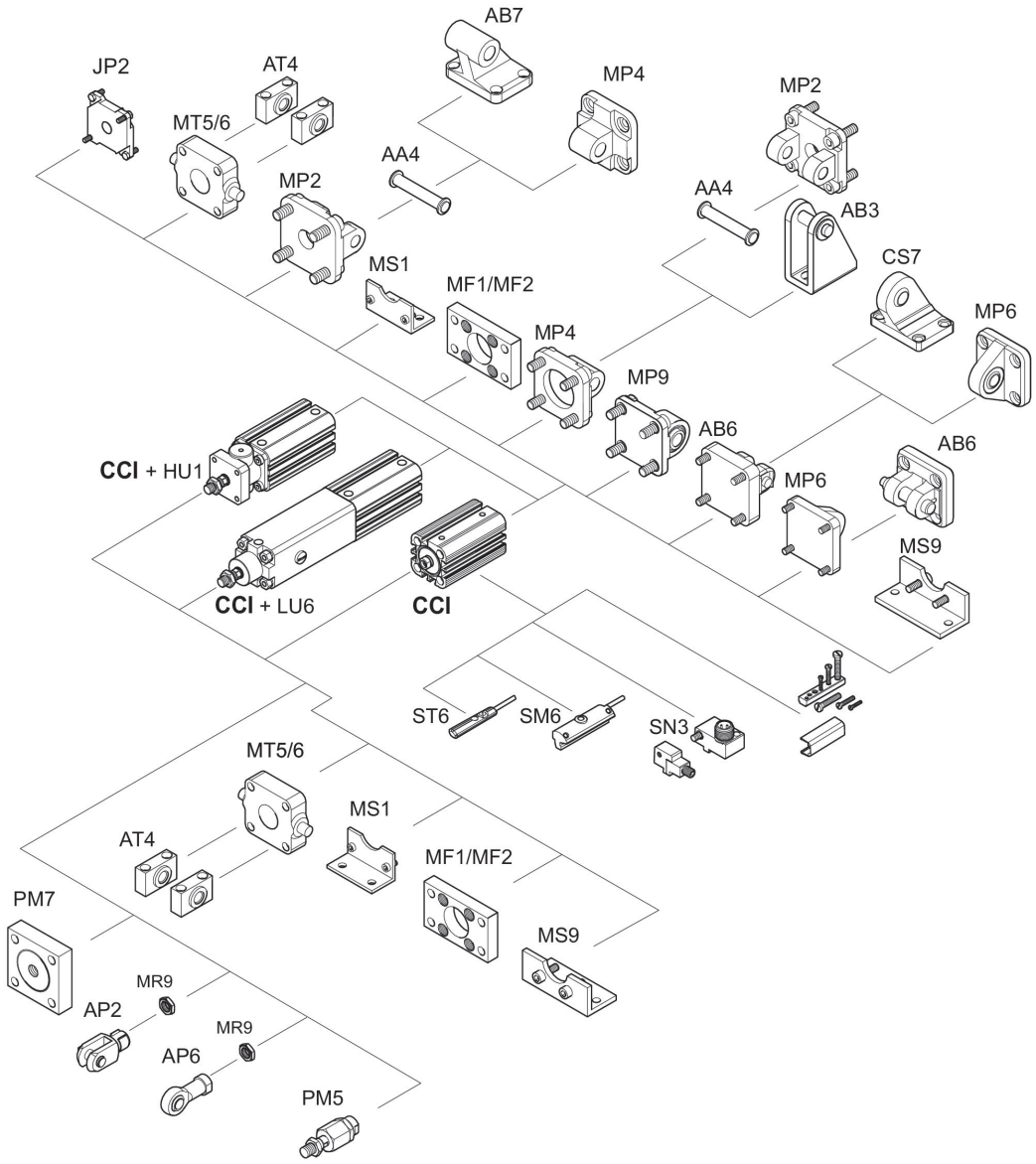


NOTE: This overview drawing is only for orientation to indicate where the various accessory parts can be fastened to the cylinder. The illustration has been simplified for this purpose. It is thus not possible to derive the dimensions from this overview.