SCHMERSAL

EN Operating instructions. . . . . .pages 1 to 6
Original

Content

1 About this document
1.1 Function 1
1.2 Target group: authorised qualified personnel 1
1.3 Explanation of the symbols used 1
1.4 Appropriate use 1
1.5 General safety instructions 1
1.6 Warning about misuse 1
1.7 Exclusion of liability 2

2 Product description
2.1 Ordering code 2
2.2 Special versions 2
2.3 Purpose 2
2.4 Technical data 2
2.5 Safety classification 2

3 Mounting
3.1 General mounting instructions 3
3.2 Dimensions 3
3.3 Settings 3
3.4 Mounting of the actuating heads 3
3.5 Actuation of the position switches 4

4 Electrical connection
4.1 General information for electrical connection 4
4.2 Contact variants 4

5 Set-up and maintenance
5.1 Functional testing 5
5.2 Maintenance 5

6 Disassembly and disposal
6.1 Disassembly 5
6.2 Disposal 5

7 EU Declaration of conformity

1. About this document

1.1 Function

This operating instructions manual provides all the information you need for the mounting, set-up and commissioning to ensure the safe operation and disassembly of the the product. The operating instructions must be available in a legible condition and a complete version in the vicinity of the device.

1.2 Target group: authorised qualified personnel

All operations described in this operating instructions manual must be carried out by trained specialist personnel, authorised by the plant operator only.

Please make sure that you have read and understood these operating instructions and that you know all applicable legislations regarding occupational safety and accident prevention prior to installation and putting the component into operation.

The machine builder must carefully select the harmonised standards to be complied with as well as other technical specifications for the selection, mounting and integration of the components.

1.3 Explanation of the symbols used

Information, hint, note:
This symbol is used for identifying useful additional information.

Caution: Failure to comply with this warning notice could lead to failures or malfunctions.
Warning: Failure to comply with this warning notice could lead to physical injury and/or damage to the machine.

1.4 Appropriate use

The Schmersal delivery programme is not intended for private consumers.

The products described in these operating instructions are developed to execute safety-related functions as part of an entire plant or machine. It is the responsibility of the manufacturer of a machine or plant to ensure the correct functionality of the entire machine or plant.

The product must be exclusively used in accordance with the versions listed below or for the applications authorised by the manufacturer. Detailed information regarding the range of applications can be found in the chapter "Product description".

1.5 General safety instructions

The user must observe the safety instructions in this operating instructions manual, the country specific installation standards as well as all prevailing safety regulations and accident prevention rules.

Further technical information can be found in the Schmersal catalogues or in the online catalogue on the Internet: products.schmersal.com.

The information contained in this operating instructions manual is provided without liability and is subject to technical modifications.

There are no residual risks, provided that the safety instructions as well as the instructions regarding mounting, commissioning, operation and maintenance are observed.

1.6 Warning about misuse

In case of inadequate or improper use or manipulations of the component, personal hazards or damage to machinery or plant components cannot be excluded. The relevant requirements of the standard EN ISO 14119 must be observed.

x.000 / 11.2021 / v.A. - 101185191-EN / O / 2021-11-18 / AE-Nr. 14363

1.7 Exclusion of liability

We shall accept no liability for damages and malfunctions resulting from defective mounting or failure to comply with this operating instructions manual. The manufacturer shall accept no liability for damages resulting from the use of unauthorised spare parts or accessories.

For safety reasons, invasive work on the device as well as arbitrary repairs, conversions and modifications to the device are strictly forbidden; the manufacturer shall accept no liability for damages resulting from such invasive work, arbitrary repairs, conversions and/or modifications to the device.

2. Product description

2.1 Ordering code

This operating instructions manual applies to the following types:

EX-①② 335-③Z④-⑤-⑥-3G/D

No.	Option	Description
①	Z	Snap action ⊖
	T	Slow action ⊖
②	Actuator selection, refer to catalogue	
③	11	1 NO / 1 NC
	02	2 NC
	20	2 NO
	01 / 01	1 NC to the left / 1 NC to the right
	12	1 NO / 2 NC
	03	3 NC
④	H	Slow action with staggered contacts
	UE	Slow action with overlapping contacts
⑤	2138	Roller lever 7H for safety applications
⑥	1637	Gold-plated contacts

⚠ In accordance with the Machinery Directive, the type plate of safety components is type plate is labelled "safety component".

Only if the information described in this operating instructions manual are realised correctly, the safety function and therefore the compliance with the Machinery Directive and the Explosion Protection Directive is maintained.

2.2 Special versions

For special versions, which are not listed in the order code below 2.1, these specifications apply accordingly, provided that they correspond to the standard version.

2.3 Purpose

The position switches are suitable for sliding and hinged guards, which need to be closed in order to ensure the required operational safety.

The components can be used in explosion-endangered areas of Zone 2 and 22 equipment category 3 GD. The installation and maintenance requirements to the standard series 60079 must be met.

⚠ The user must evaluate and design the safety chain in accordance with the relevant standards and the required safety level.

⚠ The entire concept of the control system, in which the safety component is integrated, must be validated to the relevant standards.

Conditions for safe operation

Due to their specific impact energy, the components must be fitted with a protection against mechanical stresses. The specific ambient temperature range must be observed. The user must provide for a protection against the permanent influence of UV rays.

2.4 Technical data

Designation in accordance with the ATEX directives:	⟨Ex⟩ II 3GD
Designation in accordance with standards:	Ex nC IIC T5 Gc X Ex tc IIIC T90°C Dc X
Applied standards:	EN 60947-5-1, EN IEC 60079-0, EN IEC 60079-15, EN 60079-31
Enclosure:	light-alloy diecast, paint finish
Design:	EN 50041
Max. impact energy:	4 J
Actuating speed:	max. 1 m/s
Degree of protection:	IP67
Contact material:	Silver
Contact type:	change-over with double break Zb, or 2 NC contacts, galvanically separated contact bridges
Switching system:	⊖ EN 60947-5-1, slow or snap action, NC contacts with positive break
Connection:	screw terminals
Cable section:	max. 2.5 mm² (incl. conductor ferrules)
Cable entry:	M20 x 1.5
Rated impulse withstand voltage U_{imp}:	6 kV -03Z, -12Z: 4 kV
Rated insulation voltage U_i:	500 V -03Z, -12Z: 250 V
Thermal test current I_{the}:	10 A
Utilisation category:	AC-15 / DC-13
Rated operating current/voltage I_e/U_e:	4 A / 230 VAC 4 A / 24 VDC
Max. fuse rating:	6 A gG D-fuse
Required rated short-circuit current:	1,000 A
Ambient temperature:	–20 °C … +60 °C
Mechanical life:	30 million operations
Max. switching frequency:	5,000/h
Bounce duration:	snap action: in accordance with actuating speed; slow action: < 2ms
Switchover time:	snap action: < 2 ms; slow action: in accordance with actuating speed
Cable cross-section of the cable glands:	Ø 7 … 12 mm
Cable glands:	⟨Ex⟩ II 2GD
Tightening torque:	
- Cover screws:	min. 1.0 Nm
- Cable gland:	min. 8.0 Nm

2.5 Safety classification

Standards:	EN ISO 13849-1
B_{10D} (NC contact):	20,000,000
B_{10D} (NO contact) at 10% ohmic contact load:	1,000,000
Service life:	20 years

$$MTTF_D = \frac{B_{10D}}{0{,}1 \times n_{op}} \qquad n_{op} = \frac{d_{op} \times h_{op} \times 3600\ s/h}{t_{cycle}}$$

(Determined values can vary depending on the application-specific parameters h_{op}, d_{op}, t_{cycle} as well as the load.)

3. Mounting

3.1 General mounting instructions

Fitting is only authorised in a de-energised condition

The enclosure can be fixed by means of 4 mounting holes. The mounting dimensions are mentioned at the rear of the enclosure. The fixing screws must be protected against unauthorised tampering. The use of a protective ground wire is imperative. The enclosure must not be used as an end stop. Any mounting position.

To ensure a proper functioning, the switch must be installed so that the required switch travel is obtained. For safety functions, at least the positive break travel indicated in the switch travel diagram (refer to catalogue) must be obtained. All components have sufficient after-travel to compensate for inaccuracies in the guidance of the actuating system. The actuation of the switch beyond its end stop however must be avoided.

Please observe the recommendations regarding maximum impact energy, actuating speed and tightening torque in the technical data.

Please observe the relevant requirements of the standards EN ISO 12100, EN ISO 14119 and EN ISO 14120.

3.2 Dimensions

All measurements in mm.

EX-Z/T 335-…-3G/D

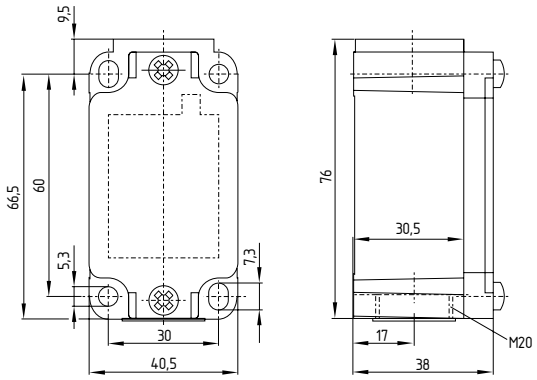

3.3 Settings

Changing the switching function (4VH, 4V7H, 4V10H)

Position switches with "4V" actuating head can be set so that they are switched either only clockwise, only counterclockwise or in both directions. The following steps are required:

1. Unscrew the retaining screws and remove the actuating head
2. Change the position of both inner plastic parts
3. Replace the actuating head and tighten the screws

Changing the switching function

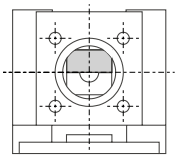

switching in both directions

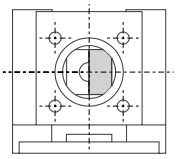

switching only clockwise

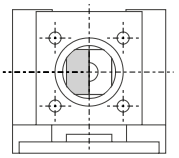

switching only counterclockwise

3.4 Mounting of the actuating heads

Repositioning the actuating head (R, K, 1K, V, 4V.H)

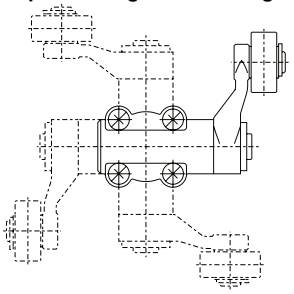

The actuating head can be repositioned by 4 x 90°. Unscrew the four screws of the actuating head (Philips tip profile), reposition the actuating head in the desired position and retighten the four screws (tightening torque 1.5 Nm).

Repositioning the roller lever (H)

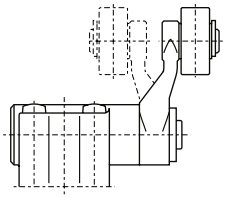

The (offset) roller arm may be reversed, so that the roller faces the inside of the arm.

Positioning the lever (.H)

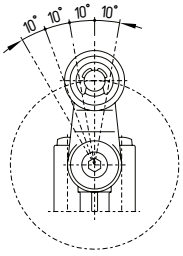

The roller lever can be repositioned over 360° on the toothed shaft in 10° steps. Unscrew the hexagonal screw approx. 4 mm, reposition the lever in the desired position and retighten the screw.

Length-adjustable lever (7H, 10H)
To adjust the length of the lever, unscrew the fixing screw of the lever. Firmly retighten the screw after the length adjustment.

Position switches with 7H or 10H actuator are not suitable for safety functions. Ordering suffix for actuator 7H with positive break: -2138.

3.5 Actuation of the position switches

Top plunger

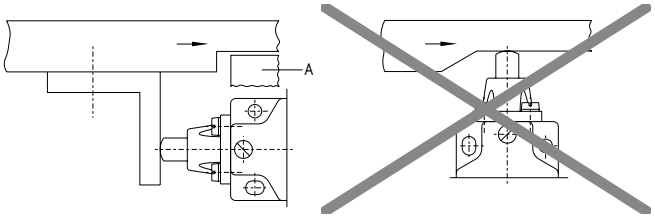

A End stop

Roller plunger

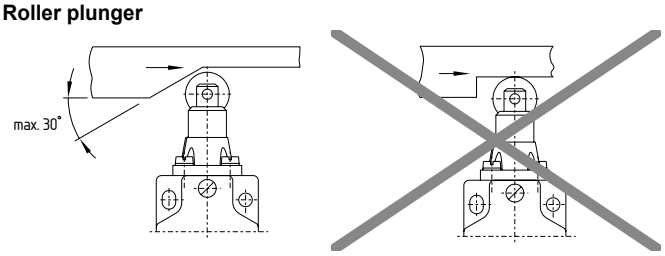

Cam disc

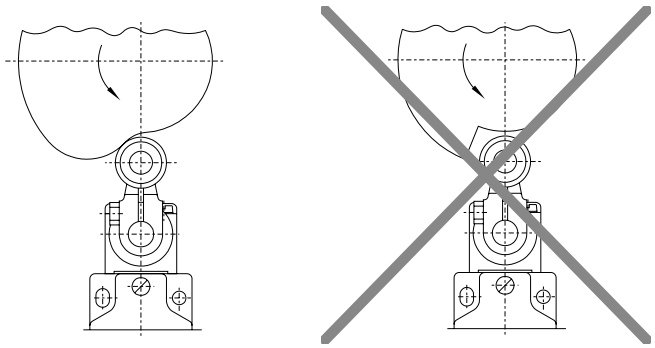

front side

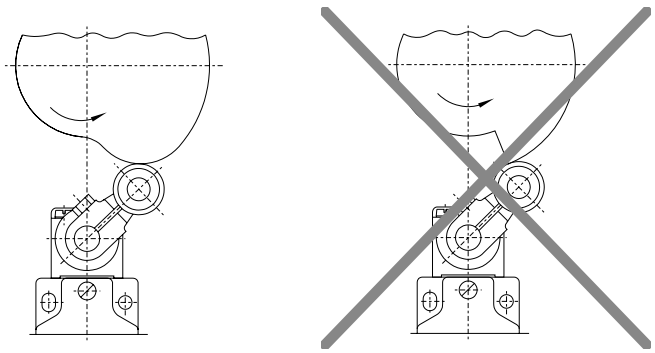

Trailing edge

4. Electrical connection

4.1 General information for electrical connection

The electrical connection may only be carried out by authorised personnel in a de-energised condition.

The contact labelling can be found in the wiring compartment of the switch.

Settling length x of the cable:
- at screw terminals: 6 mm
- at the protective conductor terminal: 5 mm

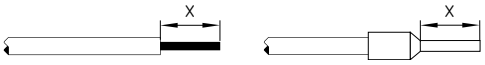

Cable glands (included in delivery) are only authorised for permanent cables. The constructor must provide for the necessary strain relief. After wiring, dust and soiling must be removed from the wiring compartment.

The connection of the external protective conductor terminal must be carried out in accordance with EN 60079-14 paragraph 6.3.

4.2 Contact variants

Contacts are shown with safety guard closed.

1 NO / 1 NC

EX-Z/T 335-11Z-3G/D

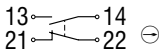

2 NC

EX-Z/T 335-02Z-3G/D

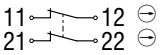

2 NO

EX-T 335-20Z-3G/D

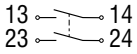

1 NO / 2 NC

EX-T 335-12Z-3G/D

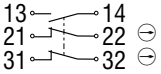

3 NC

EX-T 335-03Z-3G/D

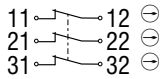

Position switches with two NO contacts (-20) are not suitable for safety functions.

5. Set-up and maintenance

5.1 Functional testing

The safety function of the safety components must be tested. The following conditions must be previously checked and met:
- The installation is executed according to the instructions
- The connection is executed correctly
- The cable is correctly executed and connected
- Check the free movement of the actuating element
- The safety component is not damaged
- Remove particles of dust and soiling
- Check cable entry and connections in de-energised condition

5.2 Maintenance

In case of correct installation in accordance with the instructions described above, the component requires little maintenance. For use in extreme conditions, we recommend routine maintenance including the following steps:
1. Check the correct fixing of the actuator and the safety switchgear
2. Lubricate the shaft or plunger
3. Remove particles of dust and soiling
4. Check cable entry and connections in a de-energised condition



Do not open the device when live.

For explosion protection reasons, the component must be exchanged after max. 30 million operations.

Damaged or defective components must be replaced.

6. Disassembly and disposal

6.1 Disassembly

The safety switchgear must be disassembled in a de-energised condition only.

6.2 Disposal

The safety switchgear must be disposed of in an appropriate manner in accordance with the national prescriptions and legislations.

7. EU Declaration of conformity

EU Declaration of conformity

SCHMERSAL

Original

K.A. Schmersal GmbH & Co. KG
Möddinghofe 30
42279 Wuppertal
Germany
Internet: www.schmersal.com

We hereby certify that the hereafter described components both in their basic design and construction conform to the applicable European Directives.

Name of the component: EX-Z/T 335-3G/D

Type: See ordering code

Marking: Ⓔx II 3G Ex nC IIC T5 Gc X
Ⓔx II 3D Ex tc IIIC T90°C Dc X

Description of the component: Positive break position switch for safety functions or position switch without safety function

Relevant Directives:

2006/42/EC	Machinery Directive (for safety components, whose type plate is labelled "Safety component")
2014/34/EU	Explosion Protection Directive (ATEX)
2011/65/EU	RoHS-Directive

Applied standards:
EN 60947-5-1:2017
EN IEC 60079-0:2018
EN IEC 60079-15:2019
EN 60079-31:2014

Person authorised for the compilation of the technical documentation:
Oliver Wacker
Möddinghofe 30
42279 Wuppertal

Place and date of issue: Wuppertal, November 11, 2021

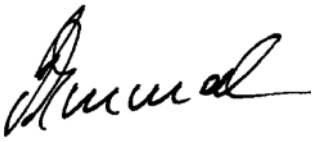

Authorised signature
Philip Schmersal
Managing Director

EX-ZT335-3GD-H-EN

The currently valid declaration of conformity can be downloaded from the internet at products.schmersal.com.

K.A. Schmersal GmbH & Co. KG
Möddinghofe 30, 42279 Wuppertal
Germany
Phone: +49 202 6474-0
Telefax: +49 202 6474-100
E-Mail: info@schmersal.com
Internet: www.schmersal.com