

3626 3626

BLANKING PLUG

maximum working pressure	bar	MPa	psi
	20	2,0	290

working temperature	°C (Celsius)	F (Farenheit)	K (Kelvin)
	From -20 to 120	From -4 to 248	From 253 to 393

body	nickel-plated brass

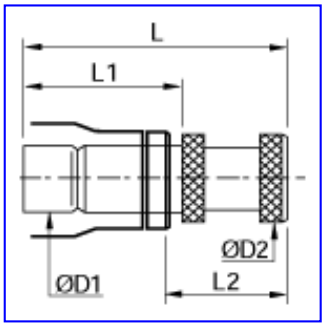

3626 3626

BLANKING PLUG

for metric tubing

Part No	ØD1 (mm)	ØD2 (mm)	L (mm)	L1 (mm)	L2 (mm)	(kg)
3626 04 00	4	6	25,5	17,5	11,5	0,004
3626 06 00	6	8	30,5	19,5	13,5	0,009
3626 08 00	8	10	33,0	20,0	16,0	0,009
3626 10 00	10	12	40,0	25,0	18,0	0,015
3626 12 00	12	14	43,0	26,0	20,0	0,022
3626 14 00	14	16	47,0	28,0	22,5	0,029