

Model number

VAZ-2T1-FK-G10-2M-PUR-V1-G

Splitter box G10, AS-Interface and auxiliary voltage to 1 x M12 round connector

Features

- One piece housing
- Simple and fast mounting
- Gold-plated and machined contacts
- Oil and abrasion resistant PUR line appropriate for drag chains
- Immunity to vibration
- Degree of protection IP68 / IP69K
- Halogen-free

Dimensions

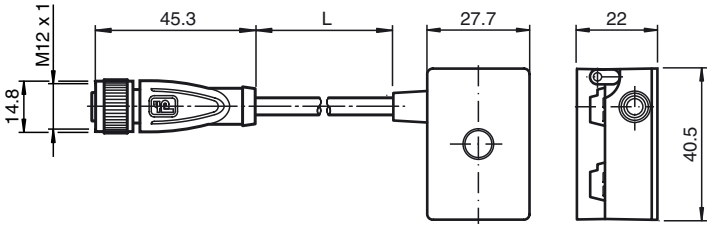

Electrical connection

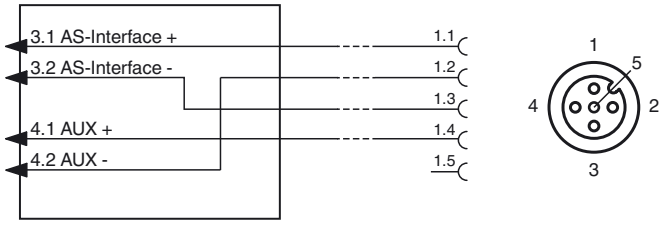

Technical data

General specifications		
Construction type		Socket, straight Flat cable terminals AS-Interface/ext. auxiliary voltage
UL File Number		E223772 "For use in NFPA 79 Applications only"
Electrical specifications		
Rated operating voltage	U_e	≤ 32 V PELV (AS-Interface , ext. auxiliary voltage AUX)
Rated operating current	I_e	≤ 3 A AS-Interface, ≤ 3 A AUX
Protection class		III
Current loading capacity		max. 4 A
Surge protection		overvoltage category III
Pulse withstand voltage		800 V
Ambient conditions		
Ambient temperature		-25 ... 75 °C (-13 ... 167 °F)
Storage temperature		-25 ... 85 °C (-13 ... 185 °F)
Pollution Degree		3
Mechanical specifications		
Degree of protection		IP67 IP67 / IP68 / IP69K with flat cable VAZ-FK-S-*
Connection		Flat cable AS-Interface: cable piercing method Flat cable ext. auxiliary voltage U_{AUX}: Insulation penetration technology Plug connection: M12 x 1 socket (V1)
Material		
Contacts		CuSn / Au
Housing		PBT PC
Body		black PUR
Cable		PUR
Mounting screw		Stainless steel 1.4305 / AISI 303
Cable		
Sheath diameter		Ø4,3 mm
Color		black
Cores		4 x 0.34 mm^2
Length	L	2 m
Mass		100 g
Tightening torque, fastening screws		1.65 Nm
Compliance with standards and directives		
Standard conformity		
Degree of protection		EN 60529:2000

Release date: 2015-10-28 14:10 Date of issue: 2015-10-28 216037_eng.xml

Approvals and certificates

UL approval	cULus Listed, Type 1 enclosure

Notes

Mounting instructions

You may screw the device onto a level mounting surface using two M4 attachment screws. The attachement screws are not included.

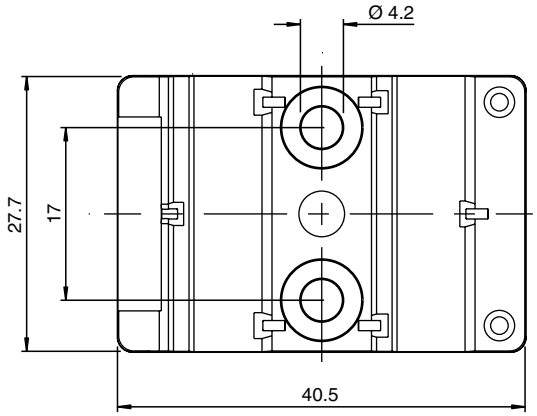

Release date: 2015-10-28 14:10 Date of issue: 2015-10-28 216037_eng.xml

Refer to “General Notes Relating to Pepperl+Fuchs Product Information”.
Pepperl+Fuchs Group www.pepperl-fuchs.com
USA: +1 330 486 0001 fa-info@us.pepperl-fuchs.com
Germany: +49 621 776 4411 fa-info@de.pepperl-fuchs.com
Singapore: +65 6779 9091 fa-info@sg.pepperl-fuchs.com
PEPPERL+FUCHS SENSING YOUR NEEDS