APEM
IR Series

Sealed momentary pushbutton switches

- **Sealed to IP67**
- **Illuminated and non-illuminated**
- **Wide choice of terminals**



Ø16 mm bushing

APEM

IR series

Sealed momentary pushbutton switches - bushing Ø 16

Distinctive features

The IR series is a range of sealed momentary pushbutton switches with dia. 16 mm bushing. This series is divided into 2 families : standard models and microswitch technology models.

Common features

- **Sealed to IP67**
- **Illuminated or non-illuminated**
- **Tactile feedback**
- **Square or round actuator**
- **Wide choice of bezel and actuator colours**
- **Wide choice of illumination colours**

Standard versions

- Numerous terminal options : solder, wire lead, straight PC, quick-connect, screw
- Screw versions withstanding up to 4A
- Electrical function : NO (2 terminals)



NO - Screw terminals



NO - Illuminated Wire lead terminals



NO - Solder lug terminals

Microswitch versions

- Withstanding up to 5A
- Two electrical functions : NC+NO (3 terminals) NC/NO combined (4 terminals)



NC+NO - 3 terminals



NC/NO - 4 terminals - Illuminated

Optional marking

Actuator marking is available on request for models with flat round actuator.



Standard version



Microswitch version

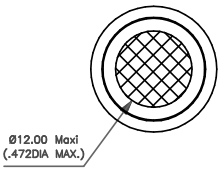

Integrated resistor

On wire lead illuminated versions, the LED resistor can be integrated in the product by APEM. On request.

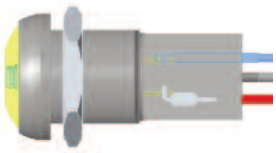

IR series

Sealed momentary pushbutton switches - bushing Ø 16 - standard version

Distinctive features and specifications



- ❑ **Illuminated and non-illuminated**
- ❑ **Tactile feedback**
- ❑ **Flat round actuator for optional marking**
- ❑ **Sealed to IP67**
- ❑ **Screw version up to 4A**

ENVIRONMENTAL SPECIFICATIONS

- Degree of protection : IP67
- Shock resistance : 100 g according to IEC 512-4, test 6c
- Vibration resistance : 10-500Hz - 10 g according to IEC 512-4, test 6d
- Salt spray : IEC 512-6, test 11f
- Robustness (non-illuminated switch) : IK06 according to EN 50102 (1 joule)
- Operating temperature : -40°C to +85°C

ELECTRICAL SPECIFICATIONS

- Max. current/voltage rating with resistive load :
  - Gold plated silver contacts (code 4) : 200mA 48VDC - 200mA 250VAC
  - Silver contacts (code 2) - screw terminals : 2A 250VAC - 4A 48VDC
- Electrical life at full load : 500.000 cycles
- Initial contact resistance : 100 mΩ max.
- Insulation resistance : 1 GΩ min. at 500VDC
- Dielectric strength : 1.500 Vrms
- Contact bounce : 10 ms

LED COMPONENT SPECIFICATIONS			
LED colour	Forward current	Typ. forward voltage	Max. forward voltage
Super red (L0S)	20mA	2,1V	2,3V
Yellow (L0Y)	20mA	2,1V	2,3V
Green (L0G)	20mA	2,1V	2,3V
Blue (L0B)	20mA	3,2V	3,8V
White (L0W)	20mA	3,35V	4,25V

A resistor must be series-connected by the user.

$$\text{Resistor value} = \frac{\text{supply voltage - LED forward voltage}}{\text{LED forward current}}$$

On wire lead versions, the LED resistor can be integrated by APEM on request.

GENERAL SPECIFICATIONS

- Panel thickness : 8 mm (.314) max.
- Total travel : 1,7 mm (.066)
- Operating force : 2N to 5N
- Mechanical life : 1.000.000 cycles
- Torque : 0,8 Nm max. applied to nut
- Soldering : 320°C max. for 3 sec.

MATERIALS

- Case : thermoplastic UL94-V0
- Plunger : polyamide 6/6
- Bushing/bezel : polyamide 6/6
- Contacts :
  4 : silver, gold plated
  2 : silver (screw terminals)
- Multi-wire lead AWG20, section 0,6 mm², UL approved
- LED wire : AWG26
- Lens : polycarbonate
- Terminal seal : epoxy

Tolerance : The general tolerance for dimensions in this brochure is ± 0,3 (.012). Overall dimension tolerance is ± 0,5 (.020).

Dimensions, specifications and data shown in this brochure are subject to change without notice.

IR series

Sealed momentary pushbutton switches - bushing Ø 16 - standard version

Overview

MODEL STRUCTURE

IR | ☐ | ☐ | ☐ | ☐

SERIES

Bezel shape

C	Square
R	Round, curved
P	Round, flat

Electrical function

3	Normally open (NO)

Terminals

S	Solder lugs
F	Wire leads
P	Straight PC (non-illuminated)
Z	Quick-connect (non-illuminated)
V	Screw (non-illuminated)

Contacts

4	Silver, gold plated
2	Silver (screw terminals only)

OPTIONS ● ● ●

Plunger colour

1	Blue
B	Dark blue
2	Black
3	Green
5	Yellow
6	Red
7	White
8	Bright chrome
9	Orange
A	Satin chrome

Bushing & bezel finish

2	Black (std)
8	Bright chrome
7	White
A	Satin chrome

LED colour

Blank	Non-illum.
L0S	Super red
L0Y	Yellow
L0G	Green
L0B	Blue
L0W	White

ABOUT THIS SERIES
On the following pages, you will find successively :
model structure of switches and options in the same order as in above chart

Dimensions : first dimensions are in mm while inches are shown as bracketted numbers.

NOTICE : please note that not all combinations of above numbers are available.
Refer to the following pages for further information.

Mounting accessories : Standard hardware supplied : 1 hex nut 19 mm (.748) across flats and 1 flat seal Hex nut P/N U4116.

Packaging unit : 25 pieces for wire lead models - 40 pieces for other models

IR series

Sealed momentary pushbutton switches - bushing Ø 16 - standard version

Round - illuminated

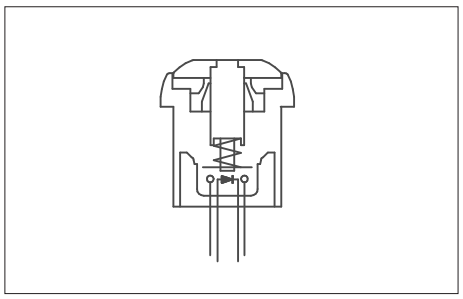

- Five LED colours
- Tin plated LED terminals
- Gold plated contacts

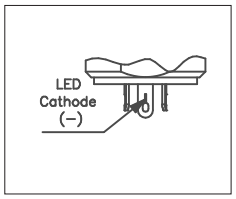

MODEL STRUCTURE

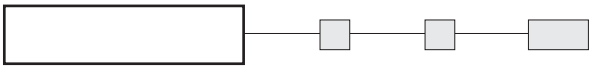

Plunger marking available on IRP models (symbol 12 mm max.). On request.

Solder lug terminals



Curved actuator **IRR3S4** — Normally Open

Flat actuator **IRP3S4** — Normally Open

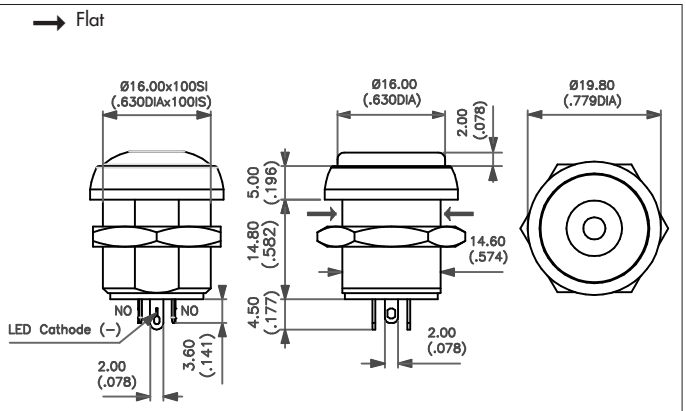

Sealed wire lead terminals



Curved actuator **IRR3F4** — Normally Open

Flat actuator **IRP3F4** — Normally Open

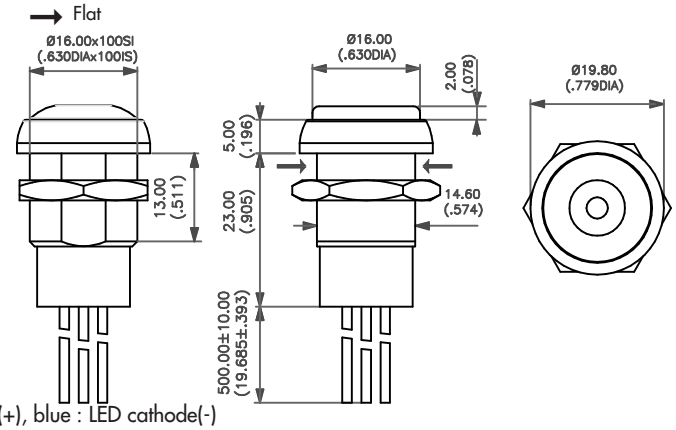

Wire colours : black : NO contact, red : LED anode(+), blue : LED cathode(-)

PLUNGER COLOUR

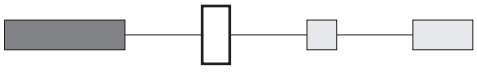

1 : blue - **B** : dark blue - **2** : black - **3** : green - **5** : yellow - **6** : red - **7** : white - **8** : bright chrome - **9** : orange
A : satin chrome

BUSHING AND BEZEL FINISH

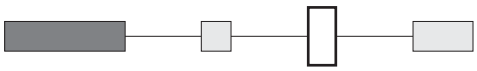

2 : black (standard) - **7** : white - **8** : bright chrome
A : satin chrome

LED COLOUR

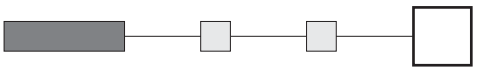

L0S : super red - **L0Y** : yellow - **L0G** : green - **L0B** : blue
L0W : white

IR series

Sealed momentary pushbutton switches - bushing Ø 16 - standard version

Round - non-illuminated

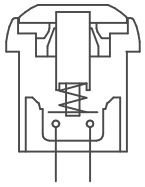

Function 3 (NO)

Straight **P** Quick-connect **Z**

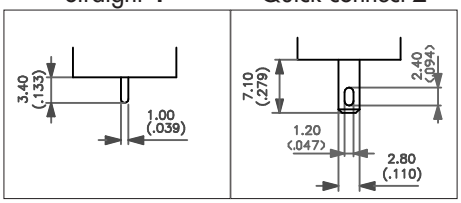

MODEL STRUCTURE

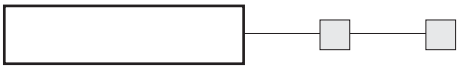

Plunger marking available on IRP models (symbol 12 mm max.). On request.

Solder lug terminals - gold plated contacts



Curved actuator, NO
IRR3S4



Flat actuator, NO
IRP3S4



→ Flat

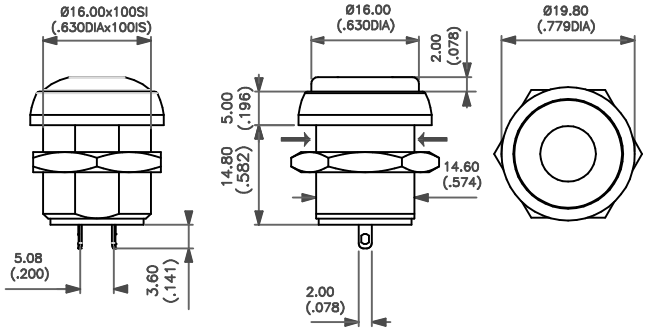

Also available with straight PC terminals : **IR•3P4** and quick-connect terminals : **IR•3Z4**.

Sealed wire lead terminals - gold plated contacts



Curved actuator, NO
IRR3F4



Flat actuator, NO
IRP3F4



→ Flat

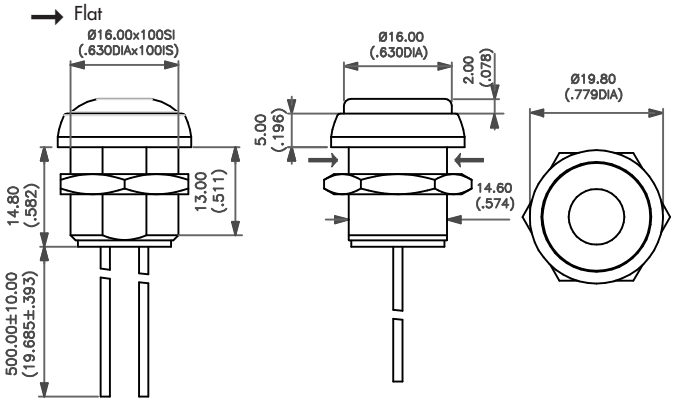

Screw terminals - silver contacts



Curved actuator, NO
IRR3V2



Flat actuator, NO
IRP3V2



→ Flat

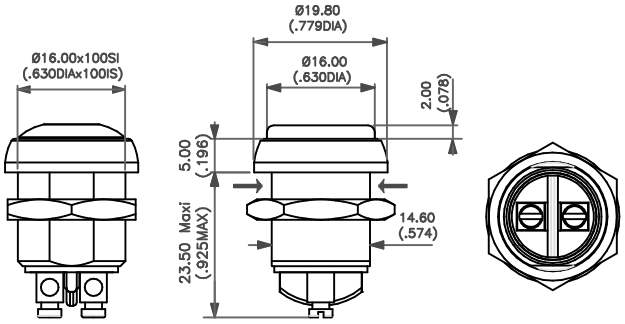

Plunger colour and bushing/bezel finish : select the desired codes on previous page.

IR series

Sealed momentary pushbutton switches - bushing Ø 16 - standard version

Square - illuminated

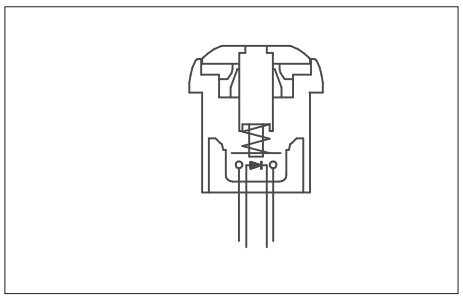

- Five LED colours
- Tin plated LED terminals
- Gold plated contacts

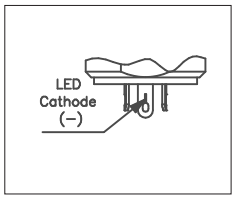

MODEL STRUCTURE

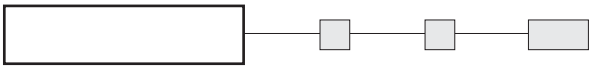

Solder lug terminals



IRC3S4



Normally Open

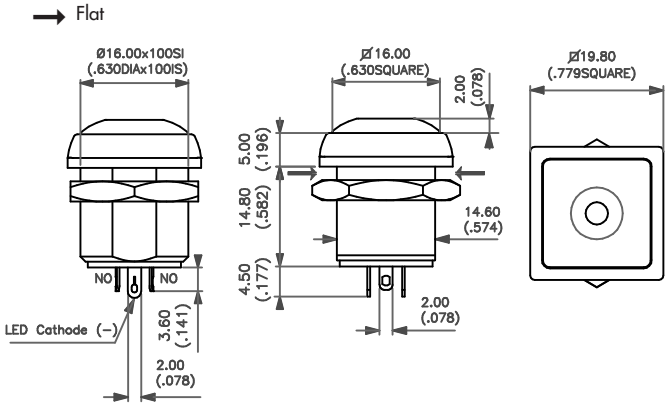

Sealed wire lead terminals



IRC3F4



Normally Open

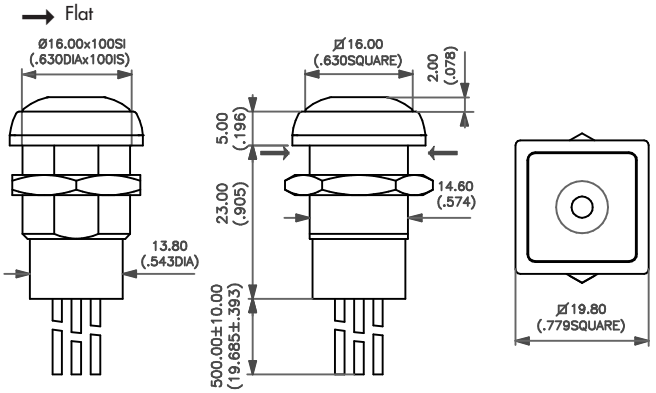

Wire colours : black : NO contact, red : LED anode(+), blue : LED cathode(-)

PLUNGER COLOUR

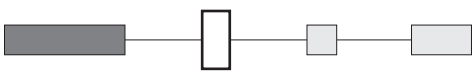

1 : blue - **B** : dark blue - **2** : black - **3** : green - **5** : yellow - **6** : red - **7** : white - **8** : bright chrome - **9** : orange
A : satin chrome

BUSHING AND BEZEL FINISH

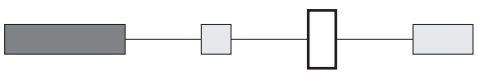

2 : black (standard) - **7** : white - **8** : bright chrome
A : satin chrome

LED COLOUR

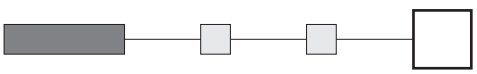

L0S : super red - **L0Y** : yellow - **L0G** : green - **L0B** : blue
L0W : white

IR series

Sealed momentary pushbutton switches - bushing Ø 16 - standard version

Square - non-illuminated

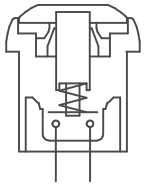

Function 3 (NO)

Straight **P** Quick-connect **Z**

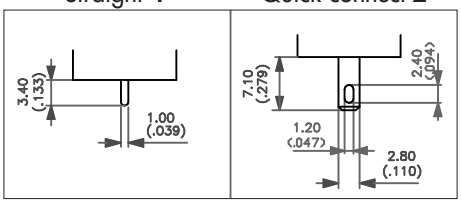

MODEL STRUCTURE

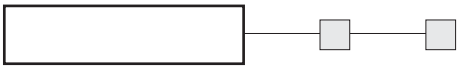

Solder lug terminals - gold plated contacts

→ Flat



IRC3S4 Normally Open

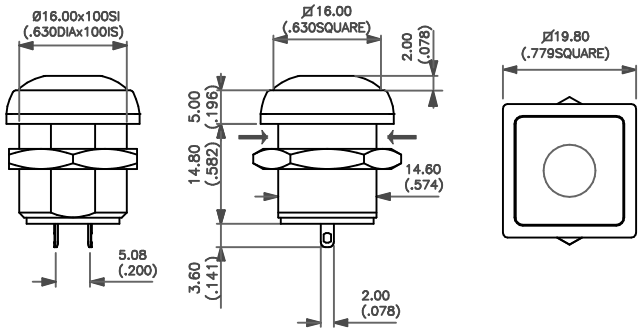

Also available with straight PC terminals : **IRC3P4** or quick-connect terminals : **IRC3Z4**.

Sealed wire lead terminals - gold plated contacts

→ Flat



IRC3F4 Normally Open

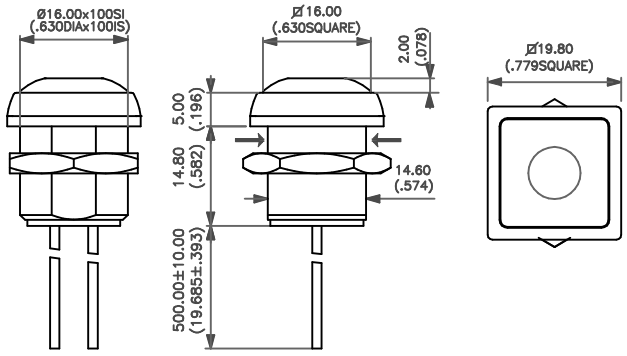

Screw terminals - silver contacts

→ Flat

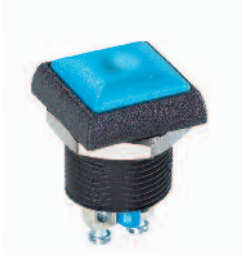

IRC3V2 Normally Open

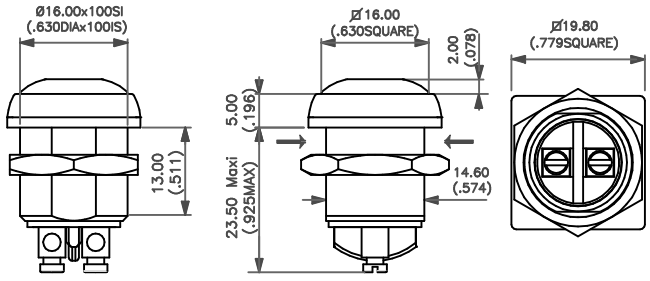

Plunger colour and bushing/bezel finish : select the desired codes on previous page.

IR series

Sealed momentary pushbutton switches - bushing Ø 16 - microswitch version

Distinctive features and specifications



- ❑ **Microswitch technology up to 5A**
- ❑ **Illuminated and non-illuminated**
- ❑ **Tactile feedback**
- ❑ **Flat round actuator for optional marking**
- ❑ **Sealed to IP67**

ENVIRONMENTAL SPECIFICATIONS

- Degree of protection : IP67
- Shock resistance : 100 g according to IEC 512-4, test 6c
- Vibration resistance : 10-500Hz - 10 g according to IEC 512-4, test 6d
- Salt spray : IEC 512-6, test 11f
- Robustness (non-illuminated switch) : IK06 according to EN 50102 (1 joule)
- Operating temperature : -20°C to +85°C

GENERAL SPECIFICATIONS

- Panel thickness : 3 mm (.118) max.
- Total travel : 1,7 mm (.066)
- Operating force : 2N to 5N
- Mechanical life : 1.000.000 cycles
- Torque : 0,8 Nm max. applied to nut
- Soldering : 320°C max. for 3 sec.

ELECTRICAL SPECIFICATIONS

- Max. current/voltage rating with resistive load :
  5A 250VAC, 50.000 cycles (function 7)
  5A 250VAC, 25.000 cycles (function 8)
- Initial contact resistance : 100 mΩ max.
- Insulation resistance : 1 GΩ min. at 500VDC
- Dielectric strength : 750 Vrms between terminals
  2.000 Vrms between terminals and frame
- Contact bounce : 10 ms

LED COMPONENT SPECIFICATIONS			
LED colour	Forward current	Typ. forward voltage	Max. forward voltage
Super red (L0S)	20mA	2V	2,5V
Yellow (L0Y)	20mA	2V	2,5V
Green (L0G)	10mA	2V	2,5V
Blue (L0B)	10mA	3,3V	3,8V

A resistor must be series-connected by the user.

$$\text{Resistor value} = \frac{\text{supply voltage - LED forward voltage}}{\text{LED forward current}}$$

MATERIALS

- Case : thermoplastic UL94-V0
- Plunger : polyamide 6/6
- Bushing/bezel : polyamide 6/6
- Contacts : silver
- Lens : polycarbonate

IR series

Sealed momentary pushbutton switches - bushing Ø 16 - microswitch version

Overview

MODEL STRUCTURE

IR | ☐ | ☐ | ☐ | ☐

SERIES

Bezel shape

C	Square
R	Round, curved
P	Round, flat

Electrical function

7	NC + NO (3 terminals)
8	NC/NO combined (4 terminals)

Terminals

Z	Solder lug or quick-connect

Contacts

2	Silver

OPTIONS

Plunger colour

1	Blue
B	Dark blue
2	Black
3	Green
5	Yellow
6	Red
7	White
8	Bright chrome
9	Orange
A	Satin chrome

Bushing & bezel finish

2	Black (std)
8	Bright chrome
7	White
A	Satin chrome

LED colour

000	Non-illum.
L0S	Super red
L0Y	Yellow
L0G	Green
L0B	Blue

The IR series for high currents is based on a microswitch. Please note that this microswitch is supplied separately.

ABOUT THIS SERIES
On the following pages, you will find successively :
model structure of switches and options in the same order as in above chart

Dimensions : first dimensions are in mm while inches are shown as bracketted numbers.

NOTICE : please note that not all combinations of above numbers are available.
Refer to the following pages for further information.

Mounting accessories : Standard hardware supplied : 1 hex nut 19 mm (.748) across flats and 1 flat seal.
Hex nut P/N : U4116

Packaging unit : 25 pieces for wire lead models - 40 pieces for other models

IR series

Sealed momentary pushbutton switches - bushing Ø 16 - microswitch version

Round - illuminated

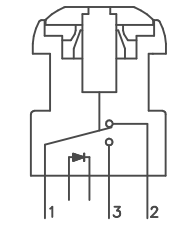

Funct. 7 (NC+NO)

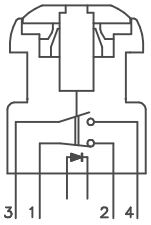

Funct. 8 (NC/NO)

- Four LED colours
- Tin plated LED terminals
- Silver contacts

Quick-connect | Solder lug

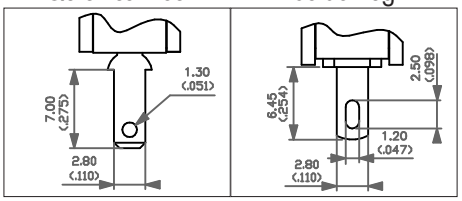

Funct. 7 (3 terminals) Funct. 8 (4 terminals)

MODEL STRUCTURE

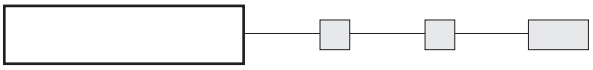

Plunger marking available on IRP models (symbol 12 mm max.). On request.

Quick-connect terminals - NC+NO - 3 terminals



Curved actuator **IRR7Z2** — NC+NO

Flat actuator **IRP7Z2** — NC+NO

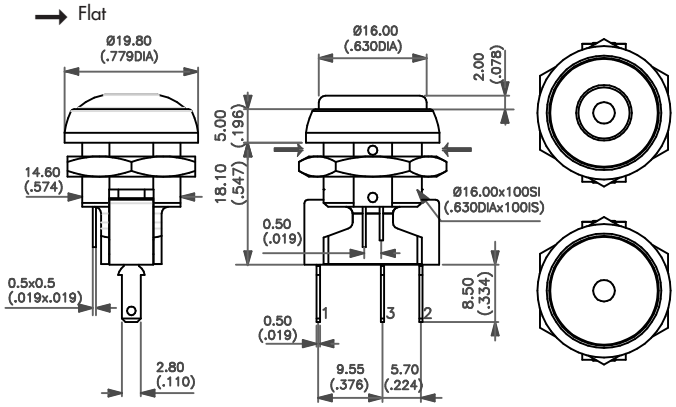

Solder lug terminals - NC/NO - 4 terminals



Curved actuator **IRR8Z2** — NC/NO combined

Flat actuator **IRP8Z2** — NC/NO combined

Terminals should be used as solder lugs only.

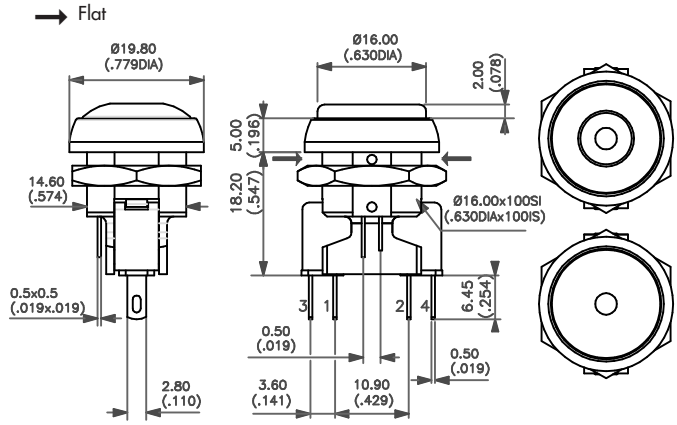

PLUNGER COLOUR

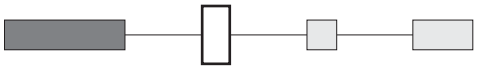

1 : blue - **B** : dark blue - **2** : black - **3** : green - **5** : yellow - **6** : red - **7** : white - **8** : bright chrome - **9** : orange
A : satin chrome

BUSHING AND BEZEL FINISH

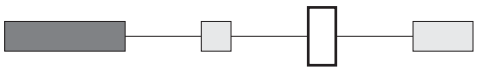

2 : black (standard) - **7** : white - **8** : bright chrome
A : satin chrome

LED COLOUR

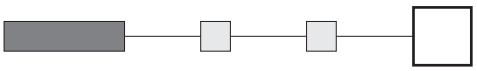

000 : non-illuminated
L0S : super red - **L0Y** : yellow - **L0G** : green - **L0B** : blue

IR series

Sealed momentary pushbutton switches - bushing Ø 16 - microswitch version

Round - non-illuminated

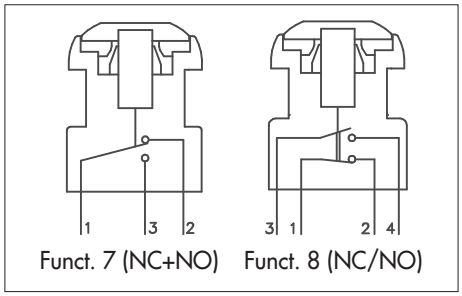

Funct. 7 (NC+NO) Funct. 8 (NC/NO)

- Silver contacts

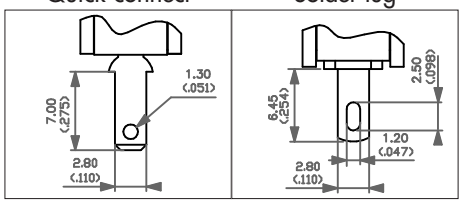

Funct. 7 (3 terminals) Funct. 8 (4 terminals)

MODEL STRUCTURE

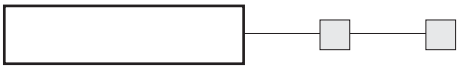

Plunger marking available on IRP models (symbol 12 mm max.). On request.

Quick-connect terminals - NC+NO - 3 terminals



Curved actuator **IRR7Z2** — NC+NO

Flat actuator **IRP7Z2** — NC+NO

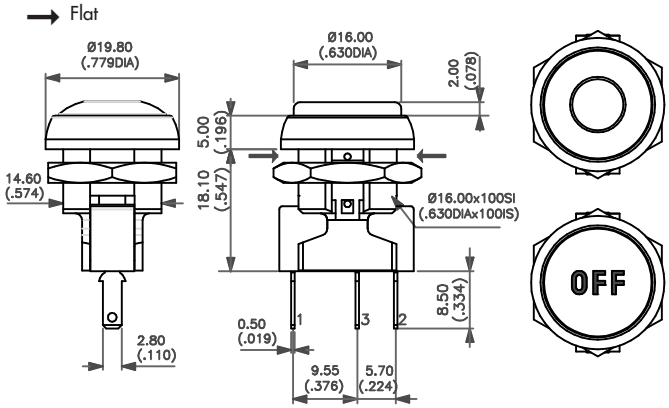

Solder lug terminals - NC/NO - 4 terminals



Curved actuator **IRR8Z2** — NC/NO combined

Flat actuator **IRP8Z2** — NC/NO combined

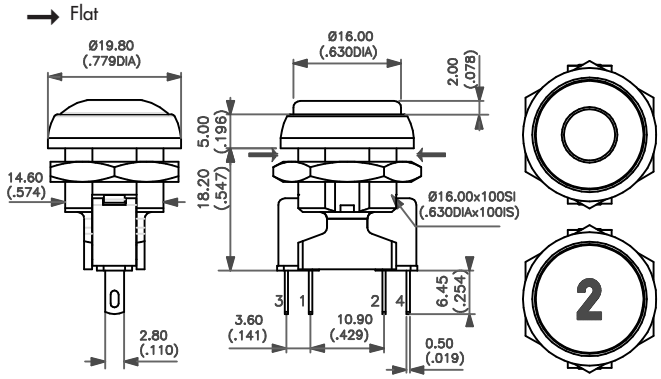

Terminals should be used as solder lugs only.

PLUNGER COLOUR

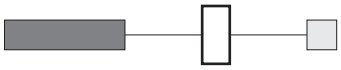

1 : blue - **B** : dark blue - **2** : black - **3** : green - **5** : yellow - **6** : red - **7** : white - **8** : bright chrome - **9** : orange
A : satin chrome

BUSHING AND BEZEL FINISH

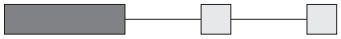

2 : black (standard) - **7** : white - **8** : bright chrome - **A** : satin chrome

IR series

Sealed momentary pushbutton switches - bushing Ø 16 - microswitch version

Square - illuminated

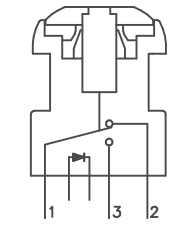

Funct. 7 (NC+NO)

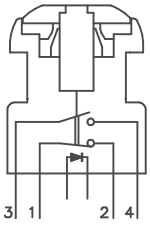

Funct. 8 (NC/NO)

- Four LED colours
- Tin plated LED terminals
- Silver contacts

Quick-connect

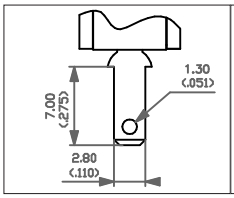

Funct. 7 (3 terminals)

Solder lug

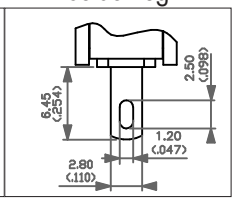

Funct. 8 (4 terminals)

MODEL STRUCTURE

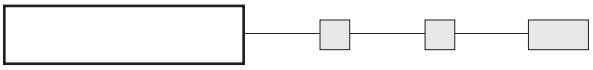

Quick-connect terminals - NC+NO - 3 terminals



IRC7Z2



NC+NO

→ Flat

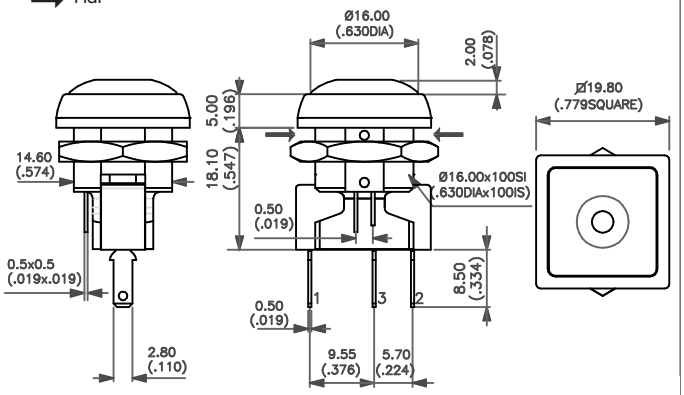

Solder lug terminals - NC/NO - 4 terminals

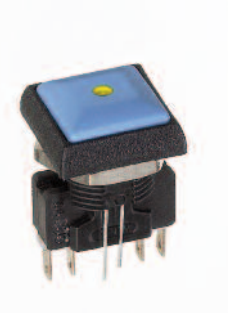

IRC8Z2



NC/NO combined

→ Flat

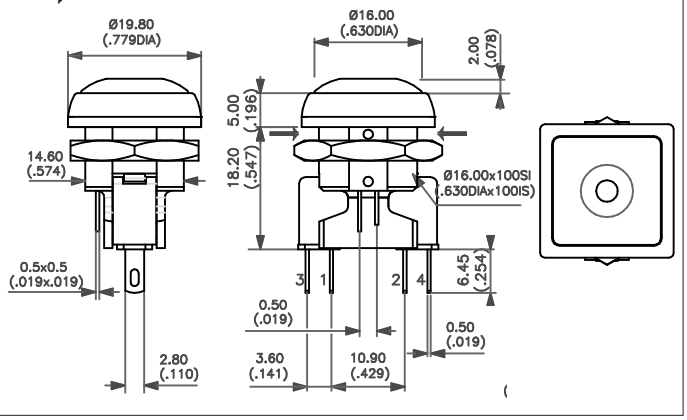

Terminals should be used as solder lugs only.

PLUNGER COLOUR

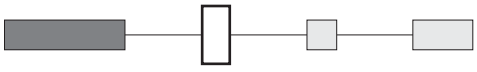

1 : blue - **B** : dark blue - **2** : black - **3** : green - **5** : yellow - **6** : red - **7** : white - **8** : bright chrome - **9** : orange
A : satin chrome

BUSHING AND BEZEL FINISH

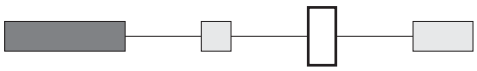

2 : black (standard) - **7** : white - **8** : bright chrome
A : satin chrome

LED COLOUR

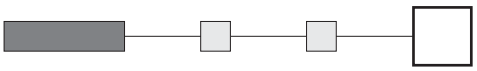

000 : non-illuminated
L0S : super red - **L0Y** : yellow - **L0G** : green - **L0B** : blue

IR series

Sealed momentary pushbutton switches - bushing Ø 16 - microswitch version

Square - non-illuminated

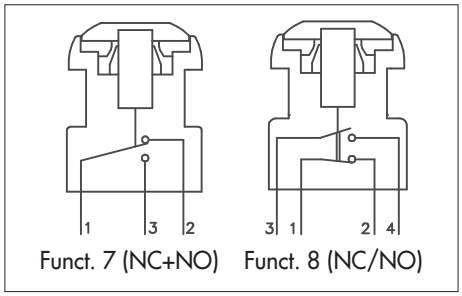

Funct. 7 (NC+NO) Funct. 8 (NC/NO)

- Silver contacts

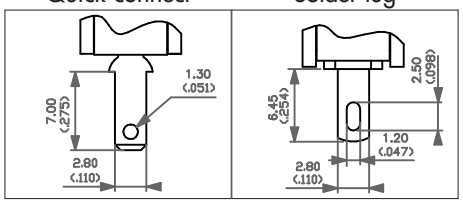

Funct. 7 (3 terminals) Funct. 8 (4 terminals)

MODEL STRUCTURE

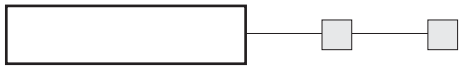

Quick-connect terminals - NC+NO - 3 terminals

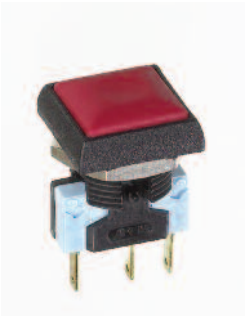

IRC7Z2 NC+NO

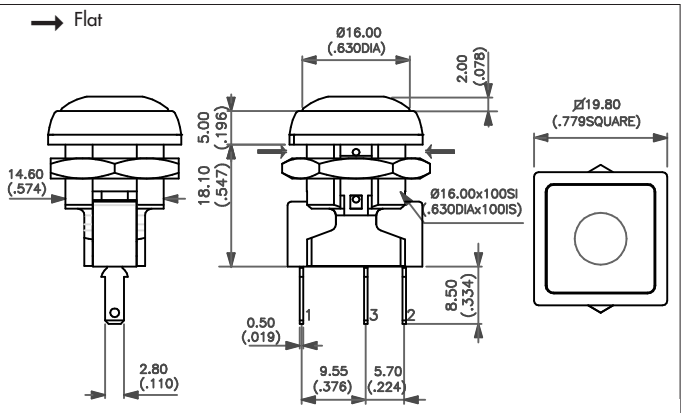

Solder lug terminals - NC/NO - 4 terminals



IRC8Z2 NC/NO combined

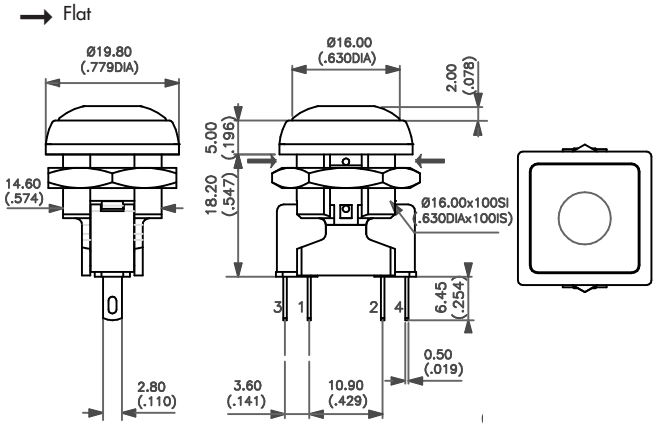

Terminals should be used as solder lugs only.

PLUNGER COLOUR

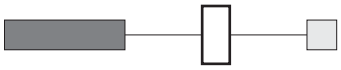

1 : blue - **B** : dark blue - **2** : black - **3** : green - **5** : yellow - **6** : red - **7** : white - **8** : bright chrome - **9** : orange
A : satin chrome

BUSHING AND BEZEL FINISH

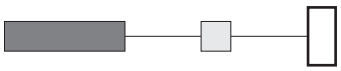

2 : black (standard) - **7** : white - **8** : bright chrome - **A** : satin chrome

IR series

Sealed momentary pushbutton switches - bushing Ø 16

MOUNTING

Panel cut-out

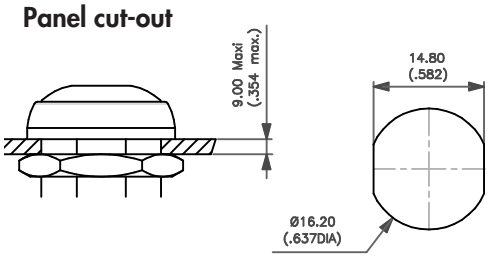

STANDARD

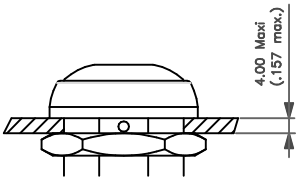

MICROSWITCH

Matrix mounting

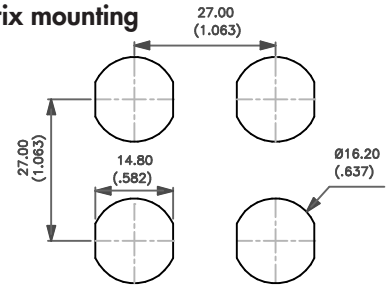

CROSS SECTION

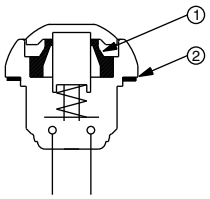

① Elastomeric membrane ② Flat seal

SEALING

IP67 for the whole series

Degree of protection provided by the enclosures of electric appliances according to IEC 529, DIN 40050 and NFC 20-010.

IP	6	7
(Ingress Protection)	Totally protected against dust	Protected against the effects of immersion up to 1 m water (30 mn)

SOLDER LUG VERSION

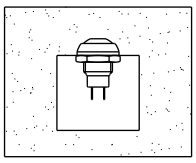

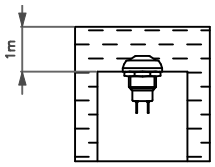

The above illustrations show non-illuminated models.

IR0810A