MURR ELEKTRONIK
stay connected

IO-Link / analog converter

AI U -10- + 10V, M12, straight

IO-Link / analog converter
AI U -10...+10V, M12
16Bit, IP65/67, IO-Link V1.1, Class A

Link to Product

Illustration



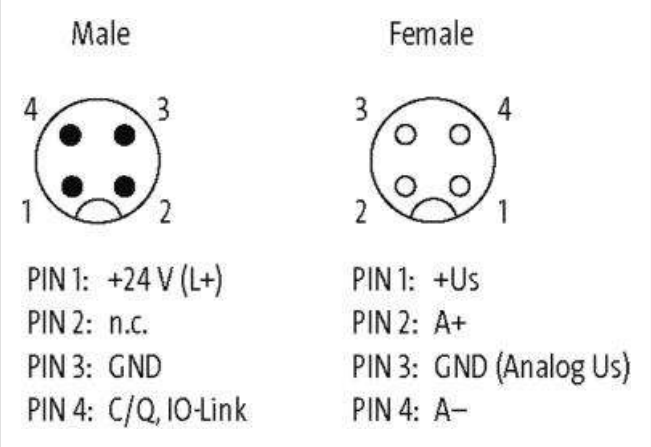

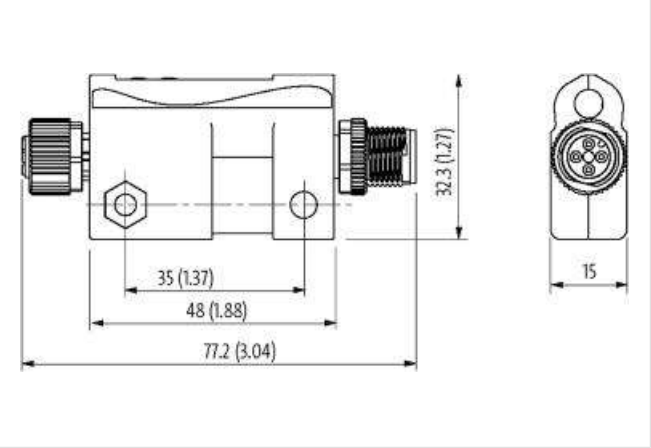

Product may differ from Image

Commercial data

ECLASS-6.0	27242601
ECLASS-6.1	27242602
ECLASS-7.0	27242602
ECLASS-8.0	27242602
ECLASS-9.0	27242602
ECLASS-10.1	27242602

The information in this Product-PDF has been compiled with the utmost care.
Liability for the correctness completeness and topicality of the information is restricted to gross negligence. Version: 2024-02-02

ECLASS-11.1	27242602
ECLASS-12.0	27242602
ETIM-5.0	EC001596
customs tariff number	85437090
GTIN	4048879622240
Packaging unit	1
Electrical data | Supply	
Operating voltage DC	24 V
Operating voltage DC min.	18 V
Operating voltage DC max.	30 V
Norm operating voltage	EN 61131-2
Operating voltage US DC	24 V
Current consumption max.	19 mA
Electrical data | Input	
Parameterizable input averaging filter process data	yes
Current carrying capacity max.	0,2 A
Conversion time analog input max.	5 ms
Industrial communication | IO-Link	
IO-Link process data length input	2 Bytes
IO-Link revision ID	V1.1
IO-Link cycle time min.	2,3 ms
IO-Link transmission rate	COM2 (38.4 kbit/s)
Port Class	A
Diagnostics	
Diagnostic via IO-Link	yes
Diagnostic via LED	yes
IO-Link events	Device defect, Overcurrent sensor supply, Overtemperature, Overvoltage supply, Undervoltage supply, lower limit, upper limit, Übersteuerung
Short circuit diagnosis	yes
LED display	Ethernet connection/data traffic
Temperature control	yes
Overload diagnosis	yes
Device protection | Electrical	
Degree of protection (EN IEC 60529)	IP65, IP67
Short circuit protection sensor supply	yes
Invers-polarity protection	yes
Resistance to loads with regenerative power	yes
Over voltage protection	yes
Mechanical data | Material data	
Material housing	Plastic
Mechanical data | Mounting data	
Height	32,3 mm
Width	77,2 mm
Depth	15 mm
Environmental characteristics | Climatic	
Operating temperature min.	-30 °C
Operating temperature max.	70 °C
Storage temperature min.	-40 °C
Storage temperature max.	85 °C
Connection type 2	

The information in this Product-PDF has been compiled with the utmost care.
Liability for the correctness completeness and topicality of the information is restricted to gross negligence. Version: 2024-02-02

Connection type 1	AI
Connection type 2	IO-Link AI
Family construction form	M12
Gender	female
Color contact carrier	black
Coding	A
No. of poles	4
PIN 1	+ US
PIN 2	A +
PIN 3	0 V (Analog US)
PIN 4	A -
Family construction form	M12
Gender	male
Color contact carrier	black
Coding	A
No. of poles	4
PIN 1	24 V DC (L +)
PIN 2	n.c.
PIN 3	0 V (L -)
PIN 4	C / Q / IO-Link

The information in this Product-PDF has been compiled with the utmost care.
Liability for the correctness completeness and topicality of the information is restricted to gross negligence. Version: 2024-02-02