KI532A

Capacitive sensor

KIE4150NCPKG/US/IO/3D

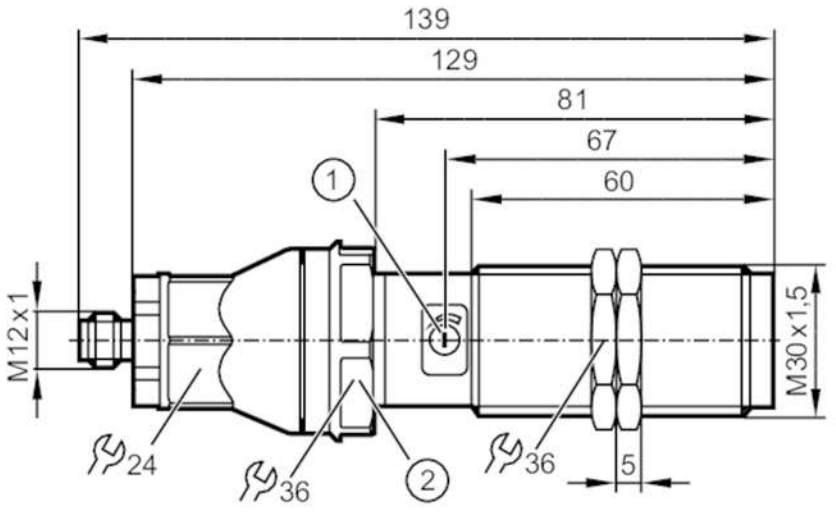

1 potentiometer
2 Tightening torque 10 Nm

Product characteristics		
Electrical design		PNP
Output function		complementary
Sensing range	[mm]	3...26
Communication interface		IO-Link
Housing		threaded type
Dimensions	[mm]	M30 x 1.5 / L = 150
Electrical data		
Operating voltage	[V]	10...30 DC
Rated insulation voltage	[V]	60
Current consumption	[mA]	< 22
Protection class		III
Reverse polarity protection		yes
Max. power-on delay time	[ms]	300
Measuring principle		capacitive
Outputs		
Electrical design		PNP
Output function		complementary
Max. voltage drop switching output DC	[V]	2.5
Max. leakage current	[mA]	0.1
Permanent current rating of switching output DC	[mA]	200
Short-time current rating of switching output	[mA]	200
Switching frequency DC	[Hz]	10
Type of short-circuit protection		pulsed

KI532A

Capacitive sensor

KIE4150NCPKG/US/IO/3D

Short-circuit proof			yes
Overload protection			yes
Detection zone			
Sensing range	[mm]		3...26
Sensing range adjustable			yes
Real sensing range Sr	[mm]		15 ± 10 %
Accuracy / deviations			
Hysteresis	[% of Sr]		1...15
Switch point drift	[% of Sr]		-20...20
Interfaces			
Communication interface			IO-Link
Transmission type			COM2 (38,4 kBaud)
IO-Link revision			1.1
SDCI standard			IEC 61131-9
Profiles			Smart Sensor: Process Data Variable; Device Identification
SIO mode			yes
Required master port type			A
Min. process cycle time	[ms]		20
IO-Link functions (acyclical)			application specific tag; operating hours counter; PNP / NPN (parametrierbar); switch point setting; Hysteresis
Operating conditions			
Ambient temperature	[°C]		-20...60
Protection			IP 65; IP 67
Tests / approvals			
ATEX marking			II 3D Ex tc IIIC T90°C Dc X
EMC		EN 61000-4-2 ESD	kV / 8 kV AD
		EN 61000-4-3 HF radiated	3 V/m (80...2000 MHz)
		EN 61000-4-4 Burst	2 kV
		EN 61000-4-6 HF conducted	3 V 0,15...80 MHz
		EN 55011	class B
		IEC 60255-5	1 kV line to line, Ri: 500 Ohm
Vibration resistance		EN 60068-2-6 Fc	10...55 Hz 1 mm amplitude, oscillation period 5 min., 30 min. per axis at resonance or 55 Hz
Shock resistance		EN 60068-2-27 Ea	30 g 6 shocks / 11 ms half-sine (x, y, z)
MTTF	[years]		623
Mechanical data			
Weight	[g]		149.2
Housing			threaded type
Mounting			non-flush mountable
Dimensions	[mm]		M30 x 1.5 / L = 150
Thread designation			M30 x 1.5
Materials			housing: PA; potentiometer: LCP; PBT
Displays / operating elements			
Display		switching status	1 x LED, yellow

KI532A

Capacitive sensor

KIE4150NCPKG/US/IO/3D

Accessories	
Items supplied	lock nuts: 2

Remarks	
Pack quantity	1 pcs.

Electrical connection

Connection

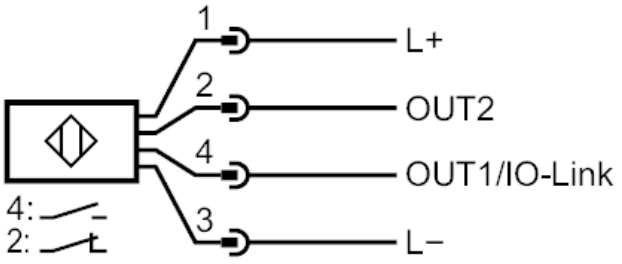

Connector: 1 x M12; Moulded body: aluminium