

E6 Hinge

Position control · Constant torque

- **Holds in every position**
- **No adjustment required**
- **Long cycle life**

Material and Finish

Large: Zinc alloy, black paint
Medium: Aluminum alloy, black paint

Performance Details

Cycle performance: 20,000 cycles within ± 20% of static torque specification

Radial load:
Large:
Maximum static load: 200 N (45 lbf)
Average ultimate load:
11000 N (2470 lbf)

Medium:
Maximum static load: 155 N (35 lbf)
Average ultimate load:
3000 N (675 lbf)

Axial load:
Large:
Maximum static load: 200 N (45 lbf)
Average ultimate load:
2800 N (630 lbf)

Medium:
Maximum static load: 155 N (35 lbf)
Average ultimate load:
1600 N (360 lbf)

Part Number

See table

Medium

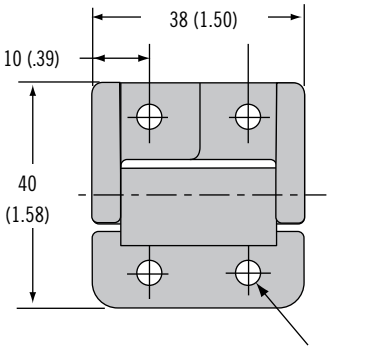

ACTUAL SIZE

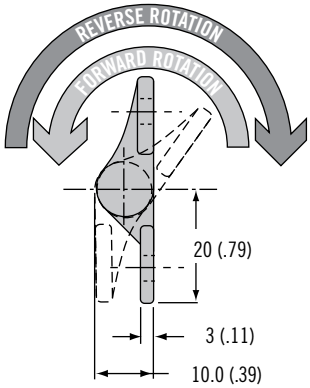

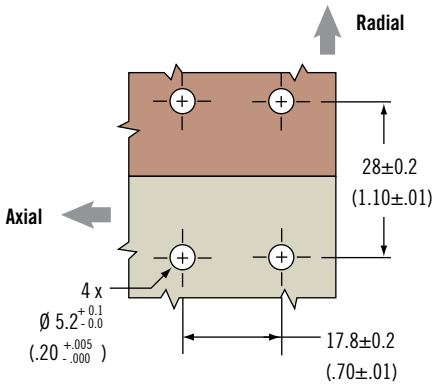

Symmetric

Part Number	Symmetric Torque N·m (in·lbf)
E6-10-200-50	Free operating
E6-10-208-50	0.9 (8)
E6-10-212-50	1.4 (12)
E6-10-216-50	1.8 (16)
E6-10-220-50	2.3 (20)

Asymmetric

Part Number	Forward Torque N·m (in·lbf)	Reverse torque N·m (in·lbf)
E6-10-212F-50	1.4 (12)	0.8 (7.2)
E6-10-216F-50	1.8 (16)	1.1 (9.6)
E6-10-220F-50	2.3 (20)	1.4 (12)
E6-10-224F-50	2.7 (24)	1.6 (14.4)
E6-10-212R-50	0.8 (7.2)	1.4 (12)
E6-10-216R-50	1.1 (9.6)	1.8 (16)
E6-10-220R-50	1.4 (12)	2.3 (20)
E6-10-224R-50	1.6 (14.4)	2.7 (24)

Other options available. For complete details on variety, part numbers, installation and specification, go to

INFO CLIC *www.southco.com/E6*

Dimensions in millimeters (inch) unless otherwise stated

E6 Hinge

Position control · Constant torque



Large

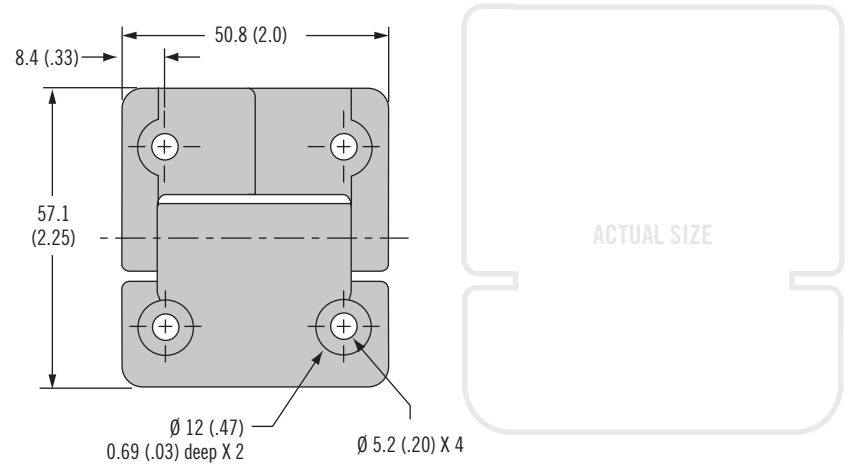

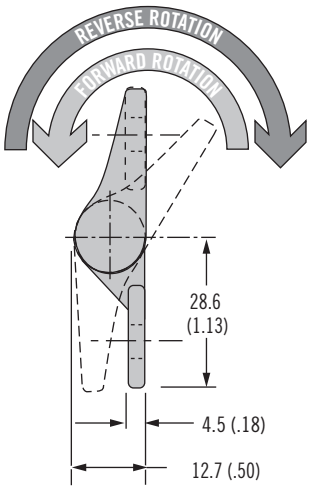

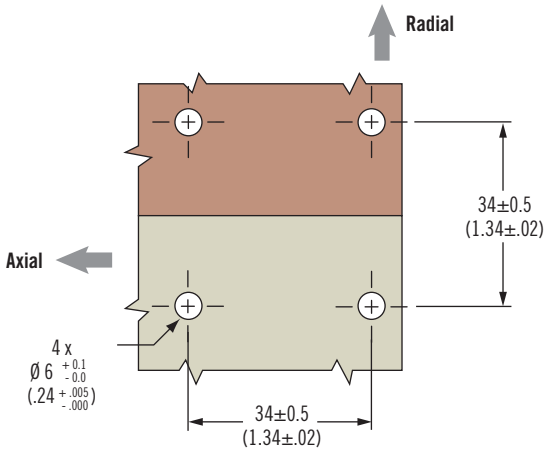

Symmetric

Part Number	Symmetric Torque N·m (in·lbf)
E6-10-400-50	Free operating
E6-10-416-50	1.8 (16)
E6-10-420-50	2.3 (20)
E6-10-430-50	3.4 (30)

Asymmetric

Part Number	Forward Torque N·m (in·lbf)	Reverse Torque N·m (in·lbf)
E6-10-420F-50	2.3 (20)	1.4 (12)
E6-10-430F-50	3.4 (30)	2.0 (18)
E6-10-440F-50	4.5 (40)	2.7 (24)
E6-10-420R-50	1.4 (12)	2.3 (20)
E6-10-430R-50	2.0 (18)	3.4 (30)
E6-10-440R-50	2.7 (24)	4.5 (40)

- **Holds in every position**
- **No adjustment required**
- **Long cycle life**

Material and Finish

Large: Zinc alloy, black paint
Medium: Aluminum alloy, black paint

Performance Details

Cycle performance: 20,000 cycles within ± 20% of static torque specification

Radial load:
Large:
Maximum static load: 200 N (45 lbf)
Average ultimate load:
11000 N (2470 lbf)

Medium:
Maximum static load: 155 N (35 lbf)
Average ultimate load:
3000 N (675 lbf)

Axial load:
Large:
Maximum static load: 200 N (45 lbf)
Average ultimate load:
2800 N (630 lbf)

Medium:
Maximum static load: 155 N (35 lbf)
Average ultimate load:
1600 N (360 lbf)

Part Number

See table

Other options available. For complete details on variety, part numbers, installation and specification, go to

INFO CLIC **www.southco.com/E6**

Dimensions in millimeters (inch) unless otherwise stated



E6 Hinge

Position control · Constant torque

- **Holds in every position**
- **No adjustment required**
- **Long cycle life**

Material and Finish

Aluminum alloy, black powder coated

Performance Details

Cycle performance: 20,000 cycles within ± 20% of static torque specification

Radial load:
Max. static load: 2,000 N (450 lbf)
Average ultimate load:
12,800 N (2,875 lbf)

Axial load:
Max. static load: 500 N (110 lbf)
Average ultimate load:
10,800 N (2,425 lbf)

Part Number

See table

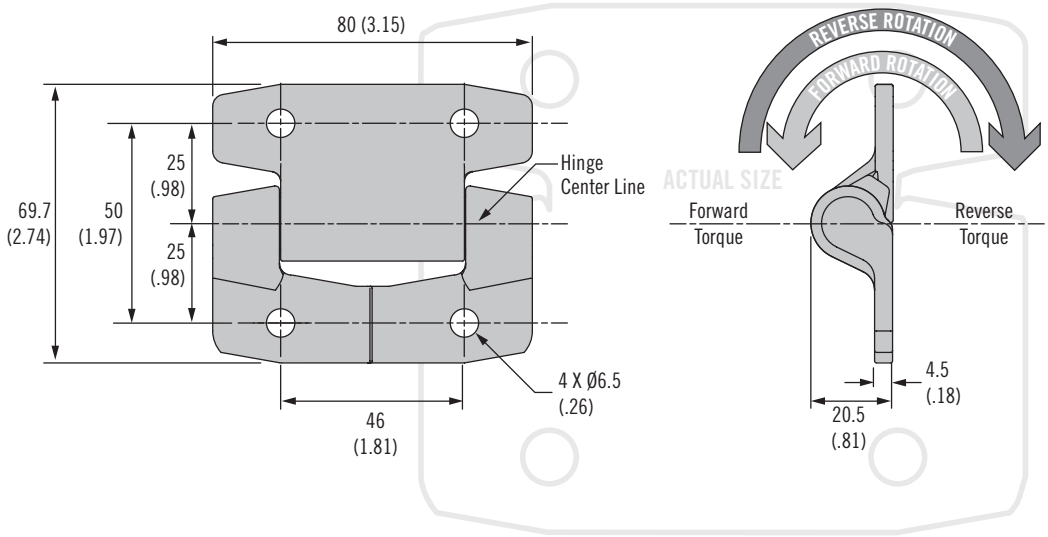

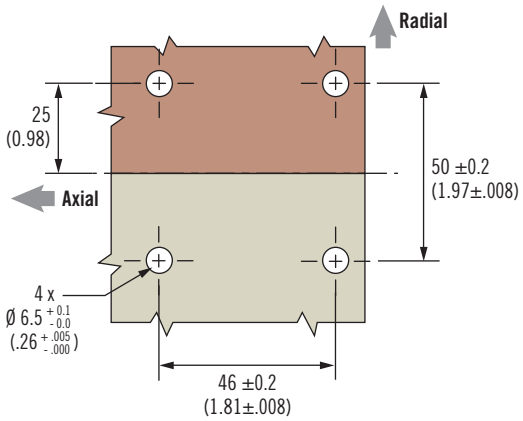

Symmetric

Part Number	Symmetric Torque N·m (in·lbf)
E6-10-620S-50	2.3 (20.0)
E6-10-635S-50	3.9 (35.0)
E6-10-650S-50	5.7 (50.0)
E6-10-665S-50	7.3 (65.0)
E6-10-680S-50	9.0 (80.0)

Asymmetric

Part Number	Forward Torque N·m (in·lbf)	Reverse Torque N·m (in·lbf)
E6-10-620F-50	2.3 (20.0)	1.7 (14.9)
E6-10-635F-50	3.9 (35.0)	3.0 (26.7)
E6-10-650F-50	5.7 (50.0)	4.0 (35.7)
E6-10-665F-50	7.3 (65.0)	5.4 (47.5)
E6-10-680F-50	9.0 (80.0)	6.7 (59.4)
E6-10-695F-50	10.7 (95.0)	7.8 (68.9)
E6-10-6110F-50	12.4 (110.0)	9.0 (79.8)
E6-10-620R-50	1.7 (14.9)	2.3 (20.0)
E6-10-635R-50	3.0 (26.7)	3.9 (35.0)
E6-10-650R-50	4.0 (35.7)	5.7 (50.0)
E6-10-665R-50	5.4 (47.5)	7.3 (65.0)
E6-10-680R-50	6.7 (59.4)	9.0 (80.0)
E6-10-695R-50	7.8 (68.9)	10.7 (95.0)
E6-10-6110R-50	9.0 (79.8)	12.4 (110.0)

Other options available. For complete details on variety, part numbers, installation and specification, go to

INFO CLIC

www.southco.com/E6

Dimensions in millimeters (inch) unless otherwise stated

E6 Hinge

Position control · Constant torque



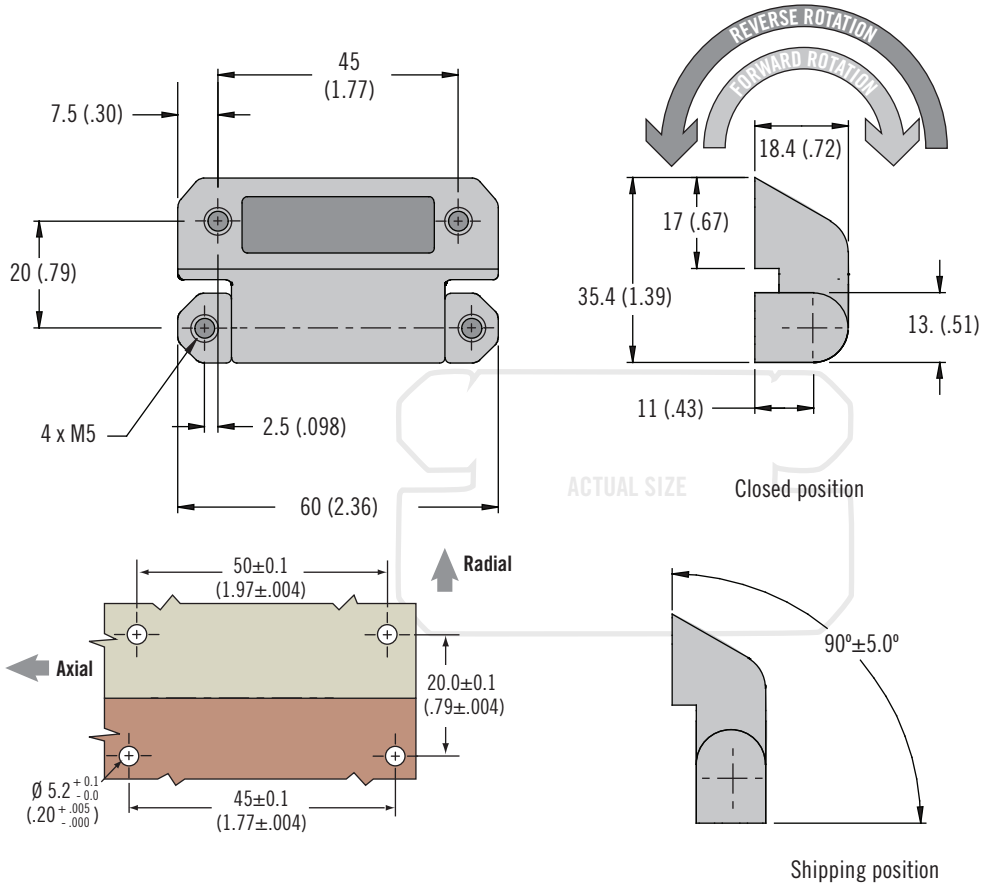

- **Holds in every position**
- **No adjustment required**
- **Long cycle life**

Material and Finish

Zinc alloy body with hardened steel internal components

Performance Details

20,000 cycles within ±20% of static torque specification

Installation Notes

Screws not supplied

Calculate screw length using the following formula:
Door thickness + 6 (.236)

Part Number

See table

Symmetric

Part Number		Symmetric Torque N·m (in·lbf)
Black	Satin Chrome	
E6-60-400-50	E6-60-400-20	Free operating
E6-60-412S-50	E6-60-412S-20	1.36 N·m (12 in·lbf)
E6-60-420S-50	E6-60-420S-20	2.26 N·m (20 in·lbf)
E6-60-428S-50	E6-60-428S-20	3.16 N·m (28 in·lbf)
E6-60-436S-50	E6-60-436S-20	4.07 N·m (36 in·lbf)

Asymmetric

Part Number		Forward Torque N·m (in·lbf)	Reverse Torque N·m (in·lbf)
Black	Satin Chrome		
E6-60-420F-50	E6-60-420F-20	2.3 (20)	1.4 (12)
E6-60-428F-50	E6-60-428F-20	3.2 (28)	1.9 (16.8)
E6-60-436F-50	E6-60-436F-20	4.1 (36)	2.4 (21.6)
E6-60-444F-50	E6-60-444F-20	5 (44)	3 (26.4)
E6-60-420R-50	E6-60-420R-20	1.4 (12)	2.3 (20)
E6-60-428R-50	E6-60-428R-20	1.9 (16.8)	3.2 (28)
E6-60-436R-50	E6-60-436R-20	2.4 (21.6)	4.1 (36)
E6-60-444R-50	E6-60-444R-20	3 (26.4)	5 (44)

Other options available. For complete details on variety, part numbers, installation and specification, go to

INFO CLIC **www.southco.com/E6A**

Dimensions in millimeters (inch) unless otherwise stated



ST-8A Hinge

Position control · Constant torque

- **Holds in every position**
- **No adjustment required**
- **Long cycle life**

Material and Finish

Zinc alloy, black paint

Performance Details

Cycle performance
20,000 cycles within ±20% of static torque specification

Installation Notes

Thread stud install with M3 nuts (not supplied)

Thru hole install with M3 (No. 4) screws (not supplied)

To ensure proper function, assembly must include a minimum of one Type **A** and one Type **B** hinge

Part Number

See table

Type A

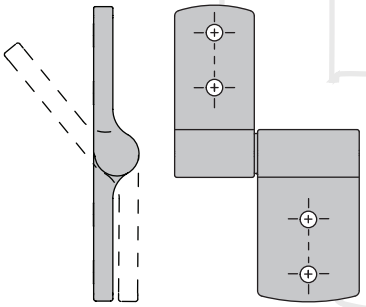

Type B

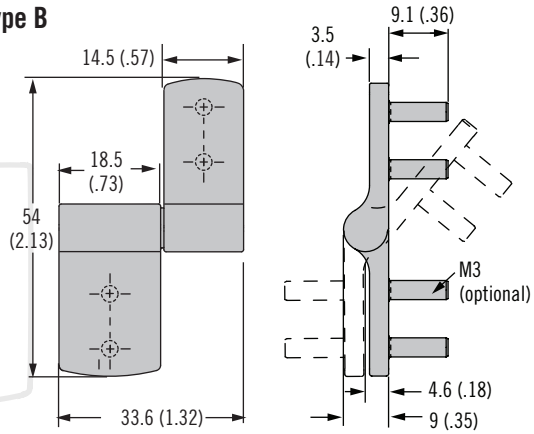

Thru Hole Version Shown

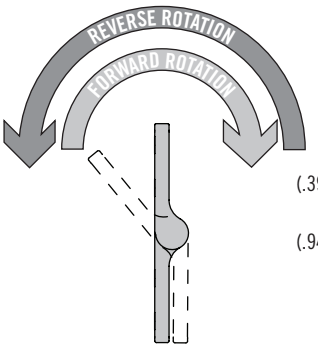

Thread Stud Version Shown

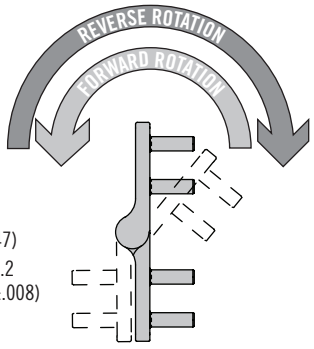

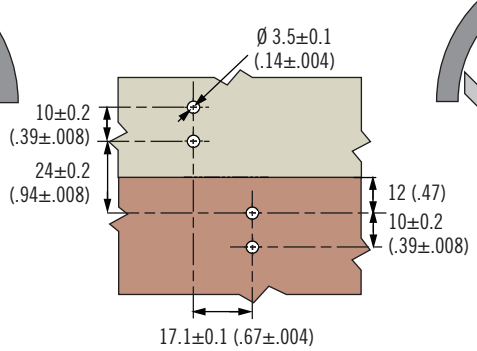

Symmetric Torque Version				
Part Number				Static Torque (forward and reverse) N•m (in•lbf)
M3 Thread Stud		Thru Hole		
Type A	Type B	Type A	Type B	
ST-8A1-40SA-50	ST-8A1-40SB-50	ST-8A-40SA-50	ST-8A-40SB-50	0.45 (4)
ST-8A1-60SA-50	ST-8A1-60SB-50	ST-8A-60SA-50	ST-8A-60SB-50	0.68 (6)
ST-8A1-80SA-50	ST-8A1-80SB-50	ST-8A-80SA-50	ST-8A-80SB-50	0.9 (8)

Asymmetric Torque Version					
Part Number				Forward Torque N•m (in•lbf)	Reverse Torque N•m (in•lbf)
M3 Thread Stud		Thru Hole			
Type A	Type B	Type A	Type B		
ST-8A1-40FA-50	ST-8A1-40FB-50	ST-8A-40FA-50	ST-8A-40FB-50	0.45 (4)	0.27 (2.4)
ST-8A1-60FA-50	ST-8A1-60FB-50	ST-8A-60FA-50	ST-8A-60FB-50	0.68 (6)	0.41 (3.6)
ST-8A1-80FA-50	ST-8A1-80FB-50	ST-8A-80FA-50	ST-8A-80FB-50	0.90 (8)	0.54 (4.8)
ST-8A1-100FA-50	ST-8A1-100FB-50	ST-8A-100FA-50	ST-8A-100FB-50	1.13 (10)	0.68 (6)
ST-8A1-40RA-50	ST-8A1-40RB-50	ST-8A-40RA-50	ST-8A-40RB-50	0.27 (2.4)	0.45 (4)
ST-8A1-60RA-50	ST-8A1-60RB-50	ST-8A-60RA-50	ST-8A-60RB-50	0.41 (3.6)	0.68 (6)
ST-8A1-80RA-50	ST-8A1-80RB-50	ST-8A-80RA-50	ST-8A-80RB-50	0.54 (4.8)	0.9 (8)
ST-8A1-100RA-50	ST-8A1-100RB-50	ST-8A-100RA-50	ST-8A-100RB-50	0.68 (6)	1.13 (10)

Other options available. For complete details on variety, part numbers, installation and specification, go to

INFO CLIC *www.southco.com/ST1*

Dimensions in millimeters (inch) unless otherwise stated

ST-11A Hinge

Position control · Constant torque



Type A

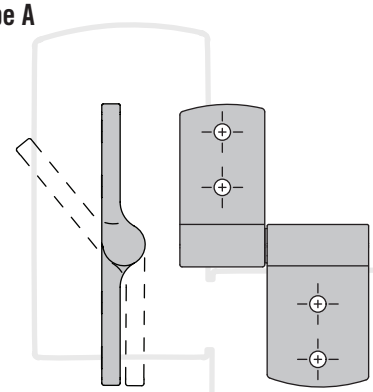

Type B

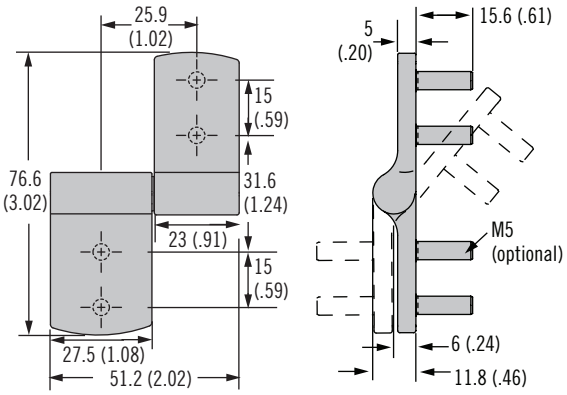

Thru Hole Version Shown

Thread Stud Version Shown

ACTUAL SIZE

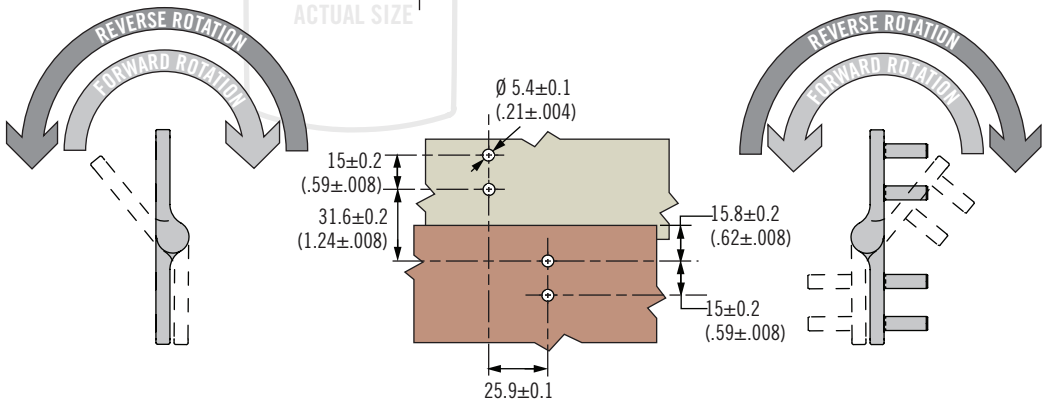

Symmetric Torque Version				
Part Number				Static Torque (forward and reverse) N·m (in·lbf)
M5 Thread Stud		Thru Hole		
Type A	Type B	Type A	Type B	
ST-11A1-140SA-50	ST-11A1-140SB-50	ST-11A-140SA-50	ST-11A-140SB-50	1.58 (14)
ST-11A1-200SA-50	ST-11A1-200SB-50	ST-11A-200SA-50	ST-11A-200SB-50	2.26 (20)
ST-11A1-260SA-50	ST-11A1-260SB-50	ST-11A-260SA-50	ST-11A-260SB-50	2.94 (26)

Asymmetric Torque Version					
Part Number				Forward Torque N·m (in·lbf)	Reverse Torque N·m (in·lbf)
M5 Thread Stud		Thru Hole			
Type A	Type B	Type A	Type B		
ST-11A1-140FA-50	ST-11A1-140FB-50	ST-11A-140FA-50	ST-11A-140FB-50	1.58 (14)	0.95 (8.4)
ST-11A1-200FA-50	ST-11A1-200FB-50	ST-11A-200FA-50	ST-11A-200FB-50	2.26 (20)	1.36 (12)
ST-11A1-260FA-50	ST-11A1-260FB-50	ST-11A-260FA-50	ST-11A-260FB-50	2.94 (26)	1.76 (15.6)
ST-11A1-320FA-50	ST-11A1-320FB-50	ST-11A-320FA-50	ST-11A-320FB-50	3.62 (32)	2.17 (19.2)
ST-11A1-140RA-50	ST-11A1-140RB-50	ST-11A-140RA-50	ST-11A-140RB-50	0.95 (8.4)	1.58 (14)
ST-11A1-200RA-50	ST-11A1-200RB-50	ST-11A-200RA-50	ST-11A-200RB-50	1.36 (12)	2.26 (20)
ST-11A1-260RA-50	ST-11A1-260RB-50	ST-11A-260RA-50	ST-11A-260RB-50	1.76 (15.6)	2.94 (26)
ST-11A1-320RA-50	ST-11A1-320RB-50	ST-11A-320RA-50	ST-11A-320RB-50	2.17 (19.2)	3.62 (32)

- **Holds in every position**
- **No adjustment required**
- **Long cycle life**

Material and Finish

Zinc alloy, black paint

Performance Details

Cycle performance
20,000 cycles within ±20% of static torque specification

Installation Notes

Thread stud install with M5 nuts (not supplied)

Thru hole install with M5 (No. 10) screws (not supplied)

To ensure proper function, assembly must include a minimum of one Type **A** and one Type **B** hinge

Part Number

See table

Other options available. For complete details on variety, part numbers, installation and specification, go to

INFO CLIC *www.southco.com/ST1*

Dimensions in millimeters (inch) unless otherwise stated