Draw wire mechanics with analogue sensor

Draw wire encoder A40, 1 m
Draw wire encoder A41, 2 m

Measuring length max. 2 m
Traverse speed max. 1 m/s

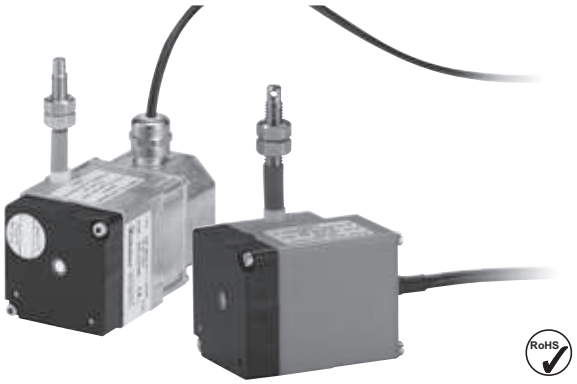

The draw wire encoders A40 and A41 with analogue output is characterised by its compact design. They are available with a potentiometer, voltage or current output.

Compact and simple

- Measuring length up to 2000 mm
- For applications with a low traversing speed
- Easy to install

Order code draw wire encoder

D5.350	X	.	A	XX	X	.	0000
Type	a			b	c		

a *Measuring range*
1 = 1000 mm
2 = 2000 mm

b *Output circuit*
11 = analogue output 4 ... 20 mA
22 = analogue output 0 ... 10 V DC
power supply 15 … 28 V DC
33 = potentiometer output 10 kΩ

c *Type of connection*
1 = cable 2 m [6.56'] for measuring range 1000 mm: axial
for measuring range 2000 mm: radial
2 = M12 connector, 4-pin, radial
(only available for measuring range 2000 mm)

Accessories for draw wire encoder

		Order No.
Guide pulley  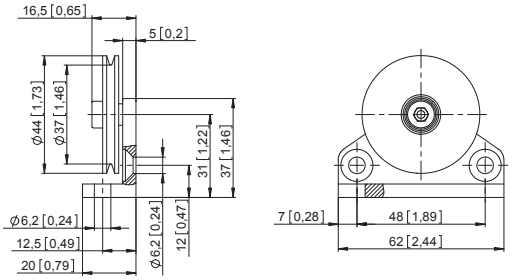	Order code for the set: - Guide pulley (anodised aluminium) - 2 x countersunk screws for lateral fixing - 2 x hexagonal screws for fixing on a flat surface	**8.0000.7000.0045**
Extension cable  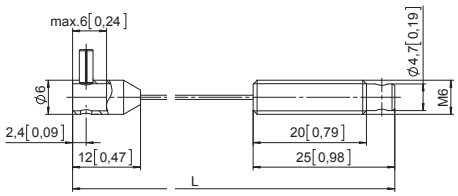	Steel wire 2 m [6.56'] Steel wire 5 m [16.40'] Steel wire 10 m [32.81'] Paraleine 2 m [6.56']	**8.0000.7000.0033** **8.0000.7000.0034** **8.0000.7000.0035** **8.0000.7000.0032**

© Fritz Kübler GmbH, subject to errors and changes. 08/2013

Draw wire mechanics with analogue sensor

Draw wire encoder A40, 1 m
Draw wire encoder A41, 2 m

Measuring length max. 2 m
Traverse speed max. 1 m/s

Technical data

Mechanical characteristics (draw wire mechanics)		
Measuring range	**1000 mm (A40)**	**2000 mm (A41)**
Speed max.	0.8 m/s	1 m/s
Working temperature	0°C ... 50°C [+32°F ... +122°F]	-10°C ... +80°C [+14°F ... +176°F]
Protection	IP50	IP65
Weight	approx. 200 g [7.06 oz]	approx. 320 g [11.29 oz]
Extension force F_{min}	2 N	
Repeat accuracy	± 0.15 mm	
Linearity	± 0.35 %	
Material housing	plastic / zinc die cast	
wire	stainless-steel ø 0.45 mm plastic-coated	

Electrical characteristics			
Analogue output	0 ... 10 V	4 ... 20 mA	Potentiometer 10 kΩ
Power supply	15 ... 28 V DC	–	–
Operating range	–	15 ... 28 V DC	max. 48 V DC
Temperature range	0°C ... 50°C [+32°F ... +122°F]	0°C ... 50°C [+32°F ... +122°F]	0°C ... 50°C [+32°F ... +122°F]
Load	max 500 Ω	max 500 Ω	–
CE compliant acc. to	EMC guideline 2004/108/EC		
RoHS guideline acc. to	guideline 2002/95/EC		

Terminal assignment

Colour	BN	WH	GN	
Pin M12	1	2	3	4
0 ... 10 V	+ 24 V DC	0 V	U_{out}	n.c.
0 ... 20 mA	I+	I-	n.c.	n.c.
Potentiometer	Po	Pe	S	n.c.

R/U converter
0…10 V

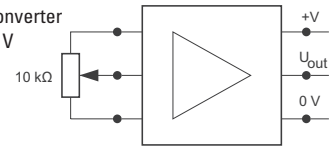

R/I converter
4…20 mA

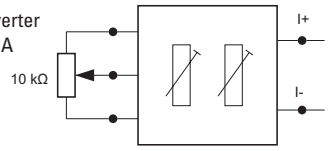

Potentiometer

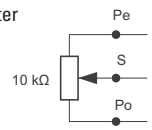

Dimensions

Dimensions in mm [inch]

for measuring range 1000 mm

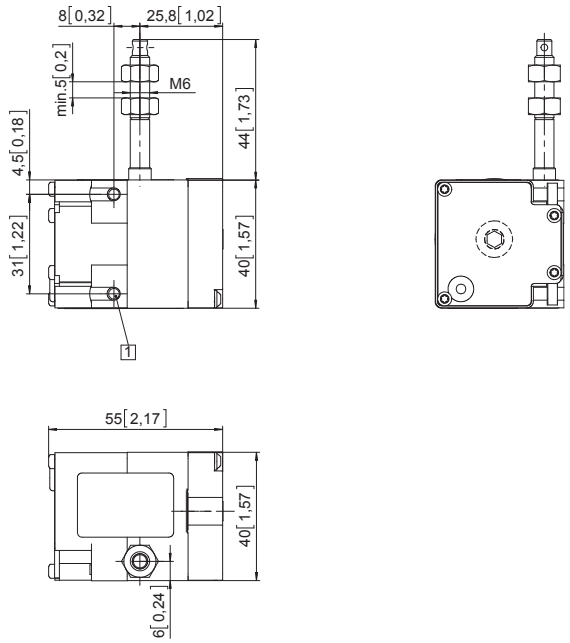

1 2 x M4, max. screw-in depth 8 mm [0.32"]

for measuring range 2000 mm

Cable connection

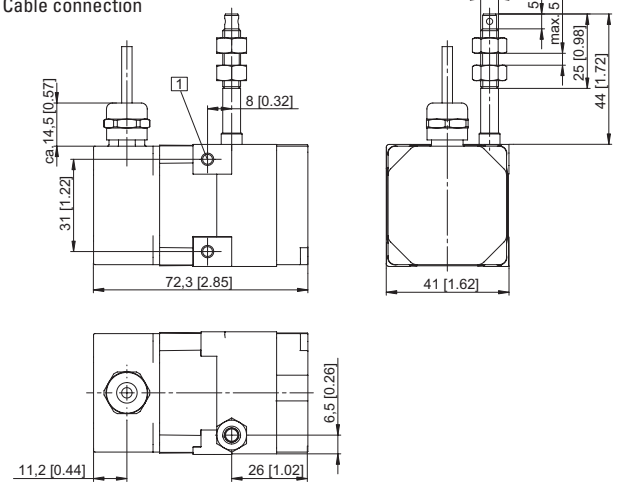

M12 connector

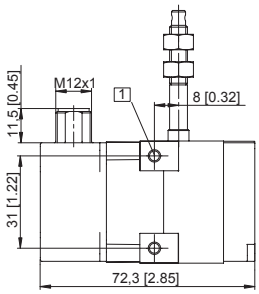

© Fritz Kübler GmbH, subject to errors and changes. 08/2013