Beacons

Solista LX Wall



The Solista LX Wall is suitable for a variety of applications, available in a red or white body and compatible with the full range of 6 bases.

A patented lens design distributes light to achieve the required illumination specified by EN 54-23, whilst using minimum current consumption.

Features

- Ultra low current consumption of 10mA
- Up to 7.5m room coverage
- 0.5Hz or 1Hz flash rate
- Coverage switch to 2.5m

Benefits

- Use where current consumption is a key consideration
- Ideal for bedrooms, bathrooms and toilets
- Switch flash rate to 0.5Hz to reduce current consumption
- Reduces power consumption by up to 50%

Dimensions

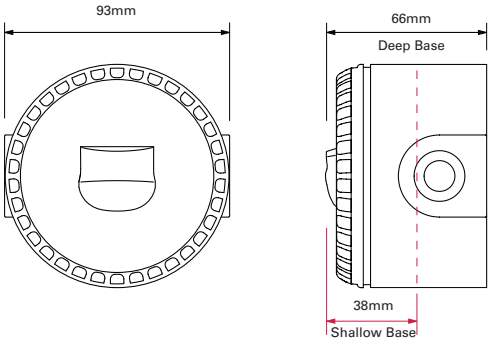

Technical Specification

Mounting Type	Wall
Voltage	9 - 60VDC
Current	10 - 25mA dependent on setting
Coverage (y)	7.5m (Switchable to 2.5m)*
Mounting Height (x)	2.4m (max)
Coverage Volume Code	W-2.4-7.5
Coverage Volume	135m³ (15m³)
Flash Rate	1Hz (Switchable to 0.5Hz)
Operating Temperature	-25°C to +70°C
Monitoring	Reverse Polarity
Protection	IP33C Shallow Base IP65 Deep and U Base
Weight	100g
Body Colour	White or Red
Flash Colour	White or Red

* CNPP test results

Solista LX Wall White



Catalogue Numbers

Reference	Cat No	Description
SOL-LX-W/WF/R1/S	812007FULL-0108X	Solista LX Wall, White Flash, Red Body, Shallow Base
SOL-LX-W/WF/R1/D	812008FULL-0109X	Solista LX Wall, White Flash, Red Body, Deep Base
SOL-LX-W/RF/R1/S	812013FULL-0114X	Solista LX Wall, Red Flash, Red Body, Shallow Base
SOL-LX-W/RF/R1/D	812005FULL-0107X	Solista LX Wall, Red Flash, Red Body, Deep Base
SOL-LX-W/RF/W1/S	812015FULL-0116X	Solista LX Wall, Red Flash, White Body, Shallow Base
SOL-LX-W/RF/W1/D	812016FULL-0117X	Solista LX Wall, Red Flash, White Body, Deep Base

For full list of part numbers, turn to page 79

VdS CERTIFIED TO EN54-23