Plastic bodied limit switch
Series TI2

Description **TI2-E2 W**	Article number **6088803005**

Operating symbol

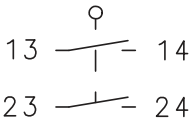

Operating diagram

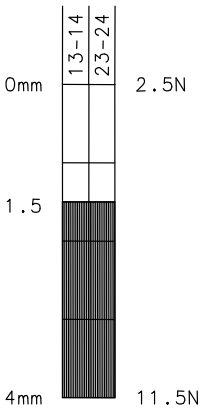

On Off

Tolerance:
Operating point ± 0,25 mm;
Operating torque ± 10 %

Fixed positioning with
e.g. fixing screw M5
according to the standard
DIN EN ISO 4762.

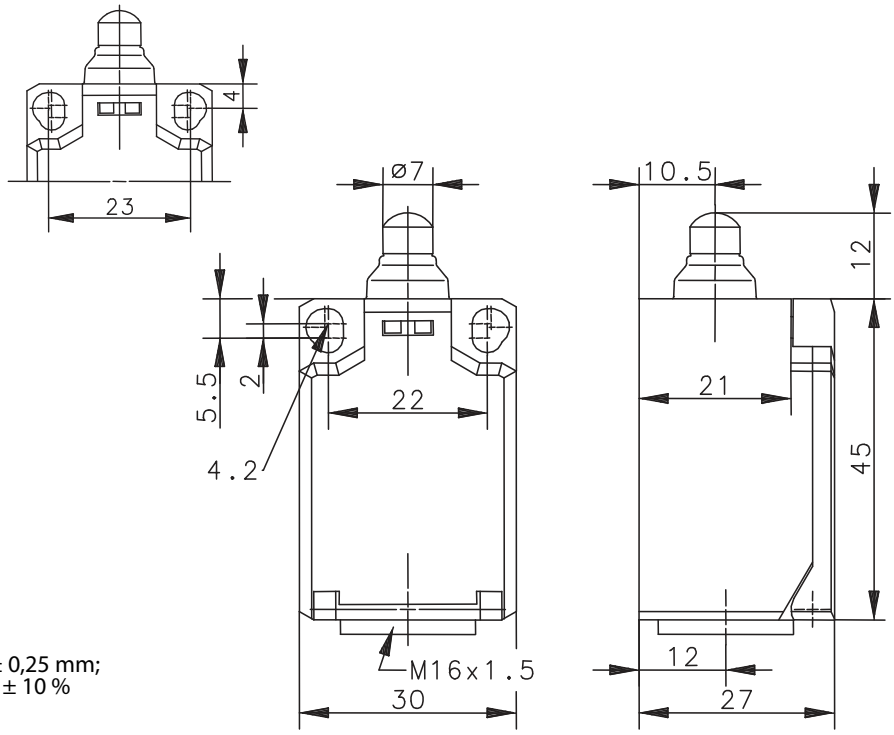

Electrical Data		
Rated insulation voltage	U_i	250 V AC
Conv. thermal current	I_{the}	10 A
Rated operational voltage	U_e	240 V
Utilization category		AC-15, U_e/I_e 240 V / 3 A
Short-circuit protective device		Fuse 6 A gG
Protection class		II, totally insulated

Technical modifications and errors excepted.
The technical datasheet corresponds to the technical state as of 2017-02-07 and will not be removed in case of changes.

Mechanical data	
Enclosure	Thermoplastic, glass fibre reinforced (UL 94-V0)
Cover	Thermoplastic, glass fibre reinforced (UL 94-V0)
Actuator	Plunger (Thermoplastic)
Ambient air temperature	-30 °C ... +80 °C
Contact type	2 NO
Mechanical life	3 x 10^6 operating cycles
Switching frequency	≤ 100 / min.
Assembly	2 x M4 or 2 x M5 fixed position for safety applications
Connection	4 screw connections (M3,5)
Conductor cross-sections	Solid: 0,5 ... 1,5 mm^2 or Litz wire with ferrules: 0,5 ... 1,5 mm^2
Cable entrance	1 x M16 x 1,5
Weight	≈ 0,04 kg
Installation position	operator definable
Protection type	IP65 acc. to EN 60529; DIN VDE 0470 T1

Actuation
The push bolt actuator is mainly intended to be actuated along its axis. Side actuation will considerably reduce switch life.

Standards	
	VDE 0660 T100, DIN EN 60947-1, IEC 60947-1
	VDE 0660 T200, DIN EN 60947-5-1, IEC 60947-5-1

EU Conformity	
	acc. to directive 2014/35/EU

Approvals	
	UL
	CCC
	$_{C}CSA_{US}$, A300, Q300 (same polarity)

Notes
The degree of protection (IP code) specified applies solely to a property closed cover and the use of an equivalent cable gland with adequate cable.