Product data sheet
Characteristics

XCKJ10511
limit switch XCKJ - thermoplastic roller lever - 1NC+1NO - snap action - Pg13



Main

Range of product	OsiSense XC
Series name	Standard format
Product or component type	Limit switch
Device short name	XCKJ
Sensor design	Form A conforming to CENELEC EN 50041
Body type	Fixed
Head type	Rotary head
Material	Metal
Body material	Zamak
Head material	Zamak
Fixing mode	By the body
Movement of operating head	Rotary
Type of operator	Spring return roller lever thermoplastic
Type of approach	Lateral approach, 1 or 2 programmable direction
Cable entry	1 entry tapped for Pg 13.5 cable gland, cable outer diameter: 9…12 mm
Number of poles	2
Contacts type and composition	1 NC + 1 NO
Contact operation	Snap action

Complementary

Switch actuation	By 30° cam
Electrical connection	Screw-clamp terminals, clamping capacity: 1 x 0.34...2 x 1.5 mm²
Contacts insulation form	Zb
Number of steps	1
Positive opening	With
Positive opening minimum torque	0.5 N.m
Minimum torque for tripping	0.25 N.m

Disclaimer: This documentation is not intended as a substitute for and is not to be used for determining suitability or reliability of these products for specific user applications

Maximum actuation speed	1.5 m/s
[Ie] rated operational current	3 A at 240 V, AC-15, A300 conforming to EN/IEC 60947-5-1 appendix A 0.27 A at 250 V, DC-13, Q300 conforming to EN/IEC 60947-5-1 appendix A
[Ithe] conventional enclosed thermal current	10 A
[Ui] rated insulation voltage	300 V conforming to UL 508 500 V (pollution degree 3) conforming to IEC 60947-1 300 V conforming to CSA C22.2 No 14
Maximum resistance across terminals	25 MOhm conforming to IEC 60255-7 category 3
[Uimp] rated impulse withstand voltage	6 kV IEC 60664 6 kV IEC 60947-1
Short-circuit protection	10 A cartridge fuse, type gG
Electrical durability	5000000 cycles, DC-13, inductive load type, 120 V, 4 W, operating rate <60 cyc/mn, load factor: 0.5 conforming to IEC 60947-5-1 appendix C 5000000 cycles, DC-13, inductive load type, 24 V, 10 W, operating rate <60 cyc/mn, load factor: 0.5 conforming to IEC 60947-5-1 appendix C 5000000 cycles, DC-13, inductive load type, 48 V, 7 W, operating rate <60 cyc/mn, load factor: 0.5 conforming to IEC 60947-5-1 appendix C
Mechanical durability	30000000 cycles
Width	40 mm
Height	77 mm
Depth	44 mm
Net weight	0.48 kg
Terminals description ISO n°1	(13-14)NO (21-22)NC

Environment

Shock resistance	50 gn for 11 ms conforming to IEC 60068-2-27
Vibration resistance	25 gn (f= 10…500 Hz) conforming to IEC 60068-2-6
IP degree of protection	IP66 conforming to IEC 60529
IK degree of protection	IK07 conforming to EN 50102
Overvoltage category	Class I conforming to IEC 61140 Class I conforming to NF C 20-030
Ambient air temperature for operation	-25…70 °C
Ambient air temperature for storage	-40…70 °C
Protective treatment	TC
Product certifications	CCC CSA UL
Standards	CSA C22.2 No 14 IEC 60947-5-1 CENELEC EN 50041 IEC 60204-1 EN 60204-1 EN 60947-5-1 UL 508

Offer Sustainability

Sustainable offer status	Green Premium product
REACh Regulation	REACh Declaration
EU RoHS Directive	Pro-active compliance (Product out of EU RoHS legal scope) EU RoHS Declaration
Mercury free	Yes
RoHS exemption information	Yes
Environmental Disclosure	Product Environmental Profile

Contractual warranty

Warranty	18 months

Dimensions

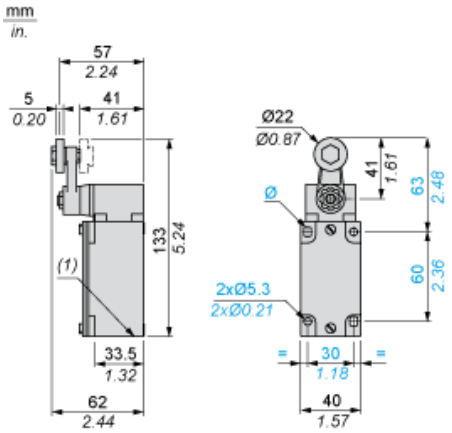

(1) 1 tapped entry Pg 13.5

Mounting with Cable Entry

Position of Cable Gland

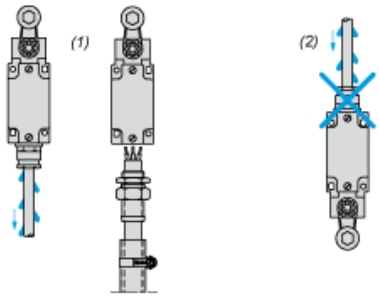

(1) Recommended
(2) To be avoided

Mounting with Rotary Heads and Levers

Type of Cam

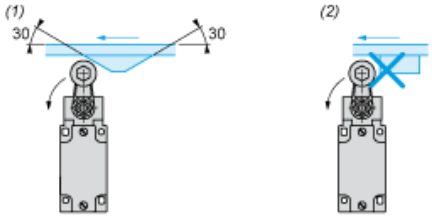

(1) Recommended
(2) To be avoided

Setting-up with Lever Head

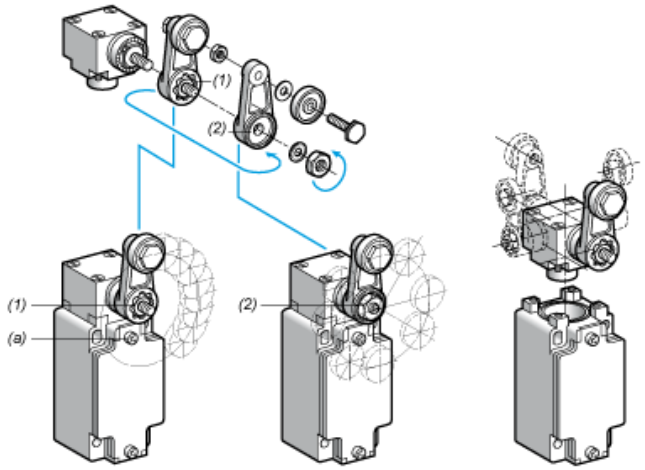

(1) 5° steps throughout 360° / Tightening torque (Min : 1) (Max : 1.5)
(2) 45° steps throughout 360° / Tightening torque (Min : 1) (Max : 1.5)
(a) Tightening torque (Min : 1) (Max : 1.5)

Setting-up with Head ZCKE05

Direction of Actuation Programming

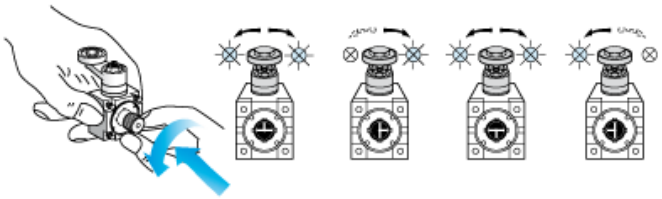

Wiring Diagram

2-pole NC + NO Snap Action

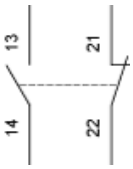

Characteristics of Actuation

Switch Actuation on End

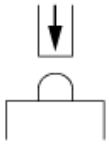

Functionnal Diagram

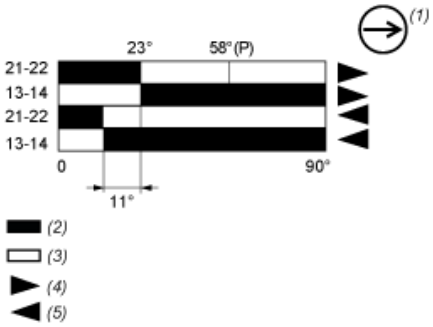

(P) Positive opening point
(1) NC contact with positive opening operation
(2) Closed
(3) Open
(4) Tripping
(5) Resetting

XCKJ10511 is replaced by:



Industrial range XCKJ10511H29

limit switch XCKJ - thermoplastic roller lever - 1NC+1NO - snap action - M20

Qty 1

Reason for Substitution: Rebranding | Substitution date: 15 February 2006