Fig 12, Fig 14HP, Fig 16, Fig 16HP and Fig 16L Strainers

Installation and Maintenance Instructions

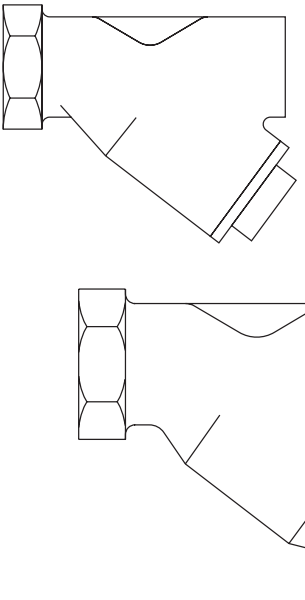

1. Safety information
2. General product information
3. Installation
4. Commissioning
5. Operation
6. Fault finding
7. Maintenance
8. Spare parts

© Copyright 2018

Printed in France

1. Safety information

Safe operation of these products can only be guaranteed if they are properly installed, commissioned, used and maintained by qualified personnel (see Section 1.11) in compliance with the operating instructions. General installation and safety instructions for pipeline and plant construction, as well as the proper use of tools and safety equipment must also be complied with.

1.1 Intended use

Referring to the Installation and Maintenance Instructions, name-plate and Technical Information Sheet, check that the product is suitable for the intended use/application. The products listed below comply with the requirements of the Pressure Equipment Directive (PED) and carry the CE mark when so required. The products fall within the following Pressure Equipment Directive categories:

Product		Group 1 Gases	Group 2 Gases	Group 1 Liquids	Group 2 Liquids
Fig 12GM	⅜" - 1"	SEP	SEP	SEP	SEP
	1¼" - 1½"	1	SEP	SEP	SEP
	2" - 2½"	2	1	SEP	SEP
Fig 12SG	½" - 1"	SEP	SEP	SEP	SEP
	1¼" - 1½"	1	SEP	SEP	SEP
	2" - 3"	2	1	SEP	SEP
Fig 14HP	¼" - 1"	SEP	SEP	SEP	SEP
	1¼"	2	SEP	2	SEP
	1½" - 2"	2	1	2	SEP
Fig 16	⅜" - 1"	SEP	SEP	SEP	SEP
	1¼"	2	SEP	2	SEP
	1½" - 2"	2	1	2	SEP
Fig 16HP	¼" - 1"	SEP	SEP	SEP	SEP
	1¼"	2	SEP	2	SEP
	1½" - 2"	2	1	2	SEP
Fig 16L	⅜" - 1"	SEP	SEP	SEP	SEP
	1¼"	2	SEP	2	SEP
	1½" - 2"	2	1	2	SEP

i) **These products have been specifically designed for use on steam, compressed air,water and other industrial fluids that are in Group 2 of the above mentioned Pressure Equipment Directive.**

ii) **Check material suitability, pressure and temperature and their maximum and minimum values. If the maximum operating limits of the product are lower than those of the system in which it is being fitted, or if malfunction of the product could result in a dangerous overpressure or overtemperature occurrence, ensure a safety device is included in the system to prevent such over-limit situations.**

iii) **Determine the correct installation situation and direction of fluid flow.**

iv) **Spirax Sarco products are not intended to withstand external stresses that may be induced by any system to which they are fitted. It is the responsibility of the installer to consider these stresses and take adequate precautions to minimise them.**

v) **Remove protection covers from all connections and protective film from all name-plates, where appropriate, before installation on steam or other high temperature applications.**

1.2 Access

Ensure safe access and if necessary a safe working platform (suitably guarded) before attempting to work on the product. Arrange suitable lifting gear if required.

1.3 Lighting

Ensure adequate lighting, particularly where detailed or intricate work is required.

1.4 Hazardous liquids or gases in the pipeline

Consider what is in the pipeline or what may have been in the pipeline at some previous time. Consider: flammable materials, substances hazardous to health, extremes of temperature.

1.5 Hazardous environment around the product

Consider: explosion risk areas, lack of oxygen (e.g. tanks, pits), dangerous gases, extremes of temperature, hot surfaces, fire hazard (e.g. during welding), excessive noise, moving machinery.

1.6 The system

Consider the effect on the complete system of the work proposed. Will any proposed action (e.g. closing isolation valves, electrical isolation) put any other part of the system or any personnel at risk?
Dangers might include isolation of vents or protective devices or the rendering ineffective of controls or alarms. Ensure isolation valves are turned on and off in a gradual way to avoid system shocks.

1.7 Pressure systems

Ensure that any pressure is isolated and safely vented to atmospheric pressure. Consider double isolation (double block and bleed) and the locking or labelling of closed valves. Do not assume that the system has depressurised even when the pressure gauge indicates zero.

1.8 Temperature

Allow time for temperature to normalise after isolation to avoid danger of burns.

1.9 Tools and consumables

Before starting work ensure that you have suitable tools and/or consumables available. Use only genuine Spirax Sarco replacement parts.

1.10 Protective clothing

Consider whether you and/or others in the vicinity require any protective clothing to protect against the hazards of, for example, chemicals, high/low temperature, radiation, noise, falling objects, and dangers to eyes and face.

1.11 Permits to work

All work must be carried out or be supervised by a suitably competent person.
Installation and operating personnel should be trained in the correct use of the product according to the Installation and Maintenance Instructions.
Where a formal 'permit to work' system is in force it must be complied with. Where there is no such system, it is recommended that a responsible person should know what work is going on and, where necessary, arrange to have an assistant whose primary responsibility is safety.
Post 'warning notices' if necessary.

1.12 Handling

Manual handling of large and/or heavy products may present a risk of injury. Lifting, pushing, pulling, carrying or supporting a load by bodily force can cause injury particularly to the back. You are advised to assess the risks taking into account the task, the individual, the load and the working environment and use the appropriate handling method depending on the circumstances of the work being done.

1.13 Residual hazards

In normal use the external surface of the product may be very hot. If used at the maximum permitted operating conditions the surface temperature of some products may reach temperatures of 538 °C (1000 °F).
Many products are not self-draining. Take due care when dismantling or removing the product from an installation (refer to 'Maintenance instructions').

1.14 Freezing

Provision must be made to protect products which are not self-draining against frost damage in environments where they may be exposed to temperatures below freezing point.

1.15 Disposal

Unless otherwise stated in the Installation and Maintenance Instructions, this product is recyclable and no ecological hazard is anticipated with its disposal providing due care is taken.

1.16 Returning products

Customers and stockists are reminded that under EC Health, Safety and Environment Law, when returning products to Spirax Sarco they must provide information on any hazards and the precautions to be taken due to contamination residues or mechanical damage which may present a health, safety or environmental risk. This information must be provided in writing including Health and Safety data sheets relating to any substances identified as hazardous or potentially hazardous.

2. General product information

2.1 General description

The products detailed are all Y-type strainers with screwed connections. They are used to protect other pipeline items from damage due to debris and dirt in the system.

Note: For additional information see the following Technical Information Sheets:

Products	Body material	Technical information sheet
Fig 12GM	Bronze	TI-P164-02
Fig 12SG	SG iron	TI-P163-01
Fig 14HP	Carbon steel	TI-P169-03
Fig 16	Stainless steel	TI-P160-01
Fig 16HP	Stainless steel	TI-P169-08
Fig 16L	Stainless steel	TI-P160-01

As standard they are fitted with 0.8 mm perforated stainless screens. Optional screens are available, which can incur an extra cost:

Optional screens in stainless steel	
Perforations	1.6 mm and 3.0 mm
Mesh	40, 100 and 200

Optional screens in monel	
Perforations	0.8 mm and 3.0 mm
Mesh	100

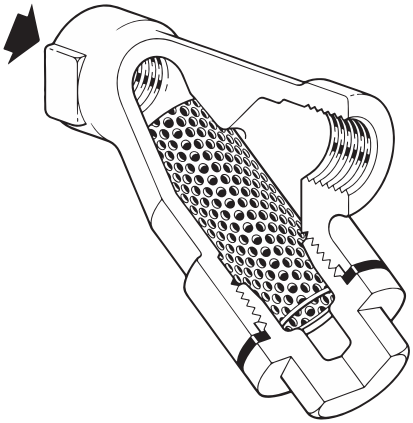

2.2 Options

The cap can be drilled to the following sizes to enable a blowdown or drain cock to be fitted:

Strainer size	Blowdown valve	Drain valve
¼" - ½"	¼"	¼"
¾" - 1"	½"	½"
1¼" - 1½"	1"	¾"
2" - 3"	1¼"	¾"

2.3 Pressure/temperature limits (ISO 6552)

Fig 12GM

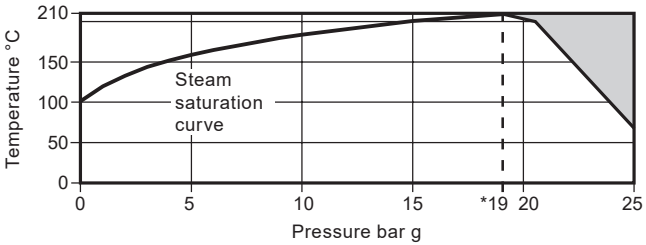

*PMO
Maximum operating pressure for saturated steam.

The product **must not** be used in this region.

Body design conditions			PN25
PMA	Maximum allowable pressure	25 bar g	(362 psi g)
TMA	Maximum allowable temperature	210 °C	(410 °F)
Minimum operating temperature		-198 °C	(-325 °F)
Designed for a maximum cold hydraulic test pressure of:		38 bar g	(551 psi g)

Fig 12SG

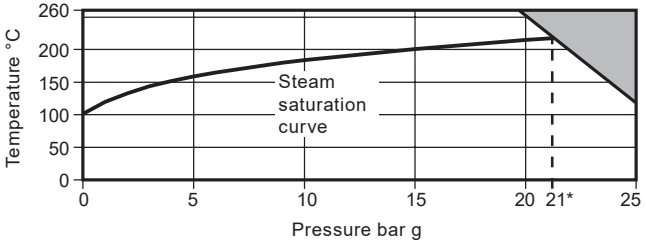

*PMO
Maximum operating pressure for saturated steam.

The product **must not** be used in this region.

Body design conditions			PN25
PMA	Maximum allowable pressure	25 bar g	(362 psi g)
TMA	Maximum allowable temperature	260 °C	(500 °F)
Minimum operating temperature		0 °C	(32 °F)
Designed for a maximum cold hydraulic test pressure of:		38 bar g	(551 psi g)

See pages 8 and 9 for Fig 14HP, Fig 16, Fig 16L and Fig 16HP pressure/temperature limits

Fig 14HP

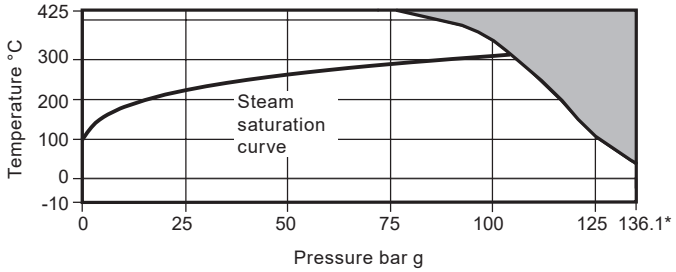

The product **must not** be used in this region.

Body design conditions			ASME Class 800
PMA	Maximum allowable pressure	136.1 bar g	(1 973 psi g)
TMA	Maximum allowable temperature	425 °C	(797 °F)
Minimum operating temperature		-10 °C	(14 °F)
Designed for a maximum cold hydraulic test pressure of:		205 bar g	(2 973 psi g)

Fig 16 and Fig 16L

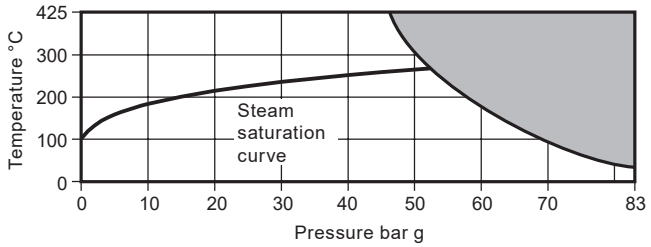

The product **must not** be used in this region.

Body design conditions			ASME Class 600
PMA	Maximum allowable pressure	83 bar g	(1 203 psi g)
TMA	Maximum allowable temperature	400 °C	(752 °F)
Minimum operating temperature		-29 °C	(-20 °F)
Designed for a maximum cold hydraulic test pressure of:		125 bar g	(1 812 psi g)

Fig 16HP

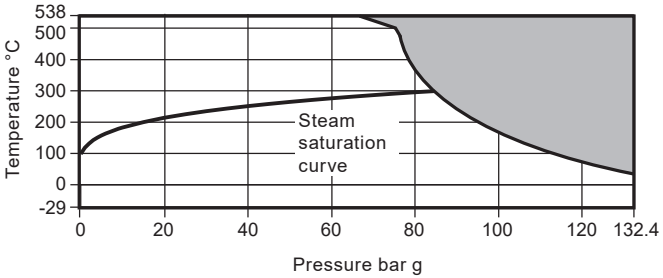

The product **must not** be used in this region.

Body design conditions			ASME Class 800
PMA	Maximum allowable pressure	132.4 bar g	(1 920 psi g)
TMA	Maximum allowable temperature	538 °C	(1 000 °F)
Minimum operating temperature		-29 °C	(-20 °F)
Designed for a maximum cold hydraulic test pressure of:		200 bar g	(2 900 psi g)

3. Installation

Note: Before actioning any installation observe the 'Safety information in Section 1.

Referring to the Installation and Maintenance Instructions, name-plate and Technical Information Sheet, check that the product is suitable for the intended installation:

3.1 Check materials, pressure and temperature and their maximum values. If the maximum operating limit of the product is lower than that of the system in which it is being fitted, ensure that a safety device is included in the system to prevent overpressurisation.

3.2 Determine the correct installation situation and the direction of fluid flow.

3.3 Remove protective covers from all connections.

3.4 Strainers can be fitted on liquid or steam/gas systems in either horizontal pipework or vertical pipework where the flow is downward. In a horizontal line on steam/gases the strainer pocket should be in the horizontal plane as this reduces the possibility of waterhammer. On liquid systems the strainer pocket should point downwards.

3.5 The strainers may be lagged if required.

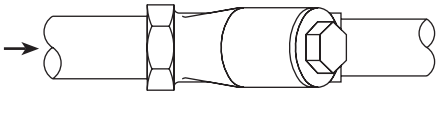

Strainer installed on steam or gas line

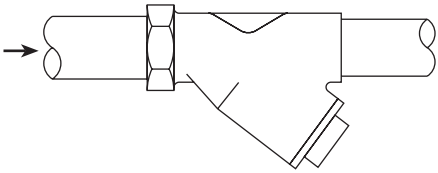

Strainer installed on liquid line

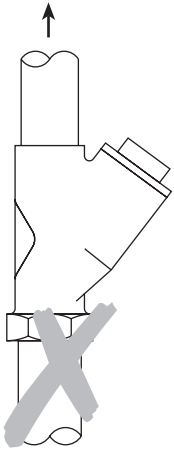

Flow upwards

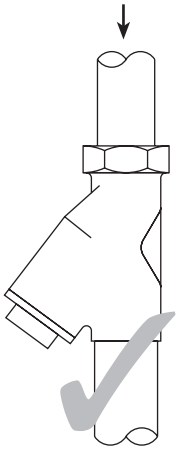

Flow downwards

4. Commissioning

After installation or maintenance ensure that the system is fully functioning. Carry out tests on any alarms or protective devices.

5. Operation

Strainers are passive items and will prevent the onward movement of dirt and debris, which is larger than the holes in the screen. The pressure drop across the strainer will increase as the screen becomes blocked. Regular cleaning/blowdown is recommended to keep the screen clean.

6. Maintenance

Symptom	Possible cause	Remedy
No flow through strainer	Blocked screen	Clean or replace screen
	System is isolated	Check isolation valves
Increased pressure drop across the strainer	Screen is blocking up	Clean or replace screen

7. Spare parts

Note: Before actioning any maintenance observe the 'Safety information 'in Section 1.

WARNING:
The strainer cap gasket contains a thin stainless steel support ring which may cause physical injury if not handled and disposed of carefully.

7.1 Before undertaking any maintenance of the strainer it must be isolated from both the supply line and return line and any pressure allowed to safely normalise to atmosphere. The trap should then be allowed to cool. When reassembling, ensure that all joint faces are clean.

7.2 How to clean or replace the strainer screen:

Remove the strainer cap. On most sizes the cap is simply unscrewed. However the cap on the 2½" and 3" Fig 12SG strainer is retained by four bolts. Once the cap is removed the strainer screen can be taken out. Clean the screen or replace with a new one. Reassemble the screen into the cap by pushing the end into the recess. Always fit a new strainer cap gasket ensuring the jointing faces are clean. Refit the strainer cap and tighten to the recommended torque. On sizes above 2" ensure that the nuts are tightened equally before final torque is applied. Check for leaks.

Size ⅜" to 2"

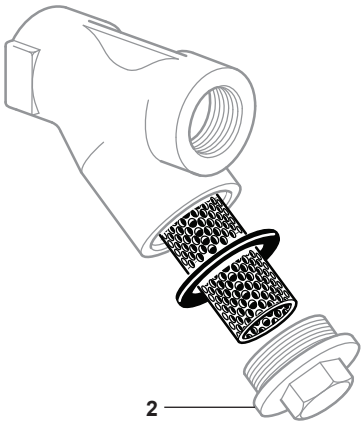

Size 2½" and 3"

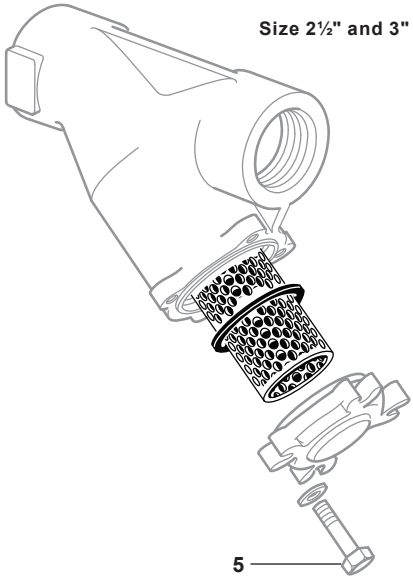

Recommended tightening torques

Product	Item	Size	No of	 or mm		N m	(lbf ft)
Fig 12 Bronze	2	⅜" - ½"	1	22	M28	38 - 40	28 - 29
		¾"	1	27	M32	42 - 48	31 - 35
		1"	1	27	M42	70 - 80	51 - 59
		1¼"	1	41	M56	124 - 144	91 - 106
		1½"	1	41	M60	164 - 184	121 - 135
		2"	1	55	M72	234 - 264	172 - 194
		2½"	1	55	3¼"-16 UNS	300 - 330	221 - 242
Fig 12SG	2	½"	1	36	M28	38 - 40	28 - 29
		¾"	1	38	M32	42 - 48	31 - 35
		1"	1	50	M42	70 - 80	51 - 59
		1¼"	1	46	M56	124 - 144	91 - 106
		1½"	1	50	M60	164 - 184	121 - 135
		2"	1	60	M72	234 - 264	172 - 194
	5	2½" - 3"	4	19	M12	50 - 55	37 - 40
Fig 14HP	2	¼" - ½"	1	36		50 - 55	37 - 40
		¾"	1	38		60 - 66	44 - 49
		1"	1	50		100 - 110	74 - 81
		1¼"	1	46		180 - 200	132 - 147
		1½"	1	50		230 - 250	169 - 184
		2"	1	60		330 - 360	243 - 265
Fig 16 and Fig 16L	2	⅜" - ½"	1	22		45 - 50	33 - 37
		¾"	1	27		60 - 66	44 - 49
		1"	1	27		100 - 110	74 - 81
		1¼"	1	46		240 - 260	176 - 191
		1½"	1	46		260 - 280	191 - 206
		2"	1	60		310 - 340	228 - 250
Fig 16HP	2	¼" - ½"	1	36		50 - 55	37 - 40
		¾"	1	38		60 - 66	44 - 49
		1"	1	50		100 - 110	74 - 81
		1¼"	1	46		180 - 200	132 - 147
		1½"	1	46		230 - 250	169 - 184
		2"	1	60		330 - 360	243 - 265

8. Available spares

The spare parts available are shown in heavy outline. Parts drawn in a grey line are not supplied as spares.

Available spares

Strainer screen (always state material, size of perforation/mesh and size of strainer)	**4**
Cap gasket (packet of 3)	**3**

How to order spares

Always order spares by using the description given in the column headed 'Available spares' and state the material, size of perforation/mesh, model No. and size of strainer.

Example: 1 off strainer screen in stainless steel with 100 mesh to suit ¾" Fig 14 steel strainer.

Size ⅜" to 2"

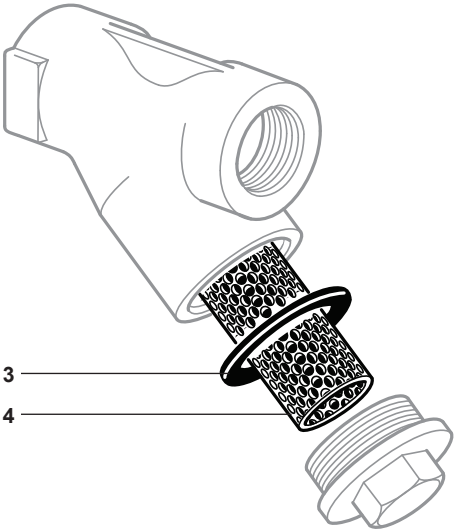

Size 2½" and 3"

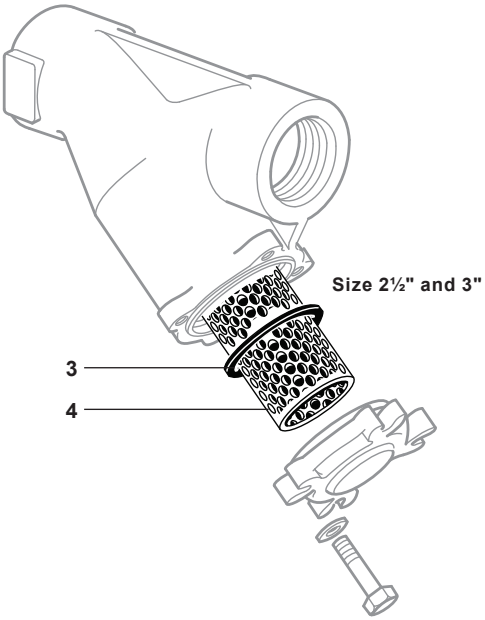

Screen interchangeability chart

Screen size Dimensions (mm)		Brass/ Bronze	SG iron	Carbon steel	Stainless steel	
Length	Diameter	Fig 12GM	Fig 12SG	Fig 14HP	Fig 16 and Fig 16L	Fig 16HP
46	**18.3**	**⅜"** ½"	½"	¼" **⅜"** ½"	**⅜"**	¼" **⅜"** ½"
60	**23.0**	¾"	¾"	¾"	¾"	¾"
71	**32.5**	1"	1"	1"	1"	1"
98	**43.5**	1¼"	1¼"	1¼"	1¼"	1¼"
108	**48.5**	1½"	1½"	1½"	1½"	1½"
139	**57.0**	2"	2"	2"	2"	2"
152	**69.5**	2½"				
168	**77.0**		2½" and 3"			

Note: Screen size is the same regardless of design or material.