O6P404

Retro-reflective sensor

O6P-FPKG/0,30m/US

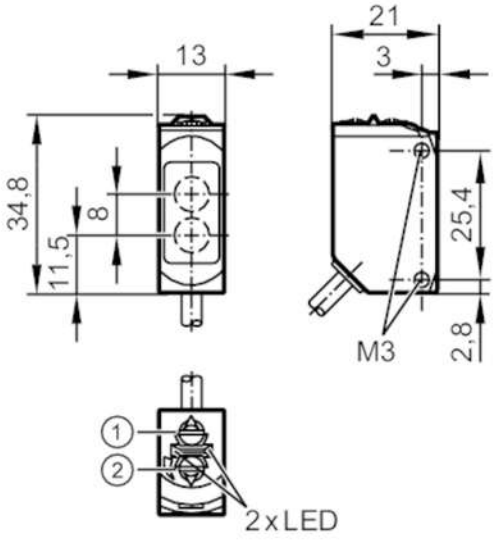

1 output function switch
2 potentiometer sensitivity
receiver in upper lens
transmitter in lower lens

Product characteristics		
Type of light		red light
Housing		rectangular
Application		
Special feature		polarisation filter
Function principle		Retro-reflective sensor
Application		suited for use in the machine tool industry
Electrical data		
Operating voltage	[V]	10...30 DC
Current consumption	[mA]	12; ((24 V))
Protection class		III
Reverse polarity protection		yes
Type of light		red light
Wave length	[nm]	633
Outputs		
Electrical design		PNP
Output function		light-on/dark-on mode; (selectable)
Max. voltage drop switching output DC	[V]	2.5
Permanent current rating of switching output DC	[mA]	100
Switching frequency DC	[Hz]	1000
Short-circuit protection		yes
Type of short-circuit protection		pulsed

O6P404

Retro-reflective sensor

O6P-FPKG/0,30m/US

Detection zone			
Range referred to prismatic reflector	[m]	0.05...5; (Prismatic reflector Ø 80 E20005)	
Range adjustable		yes	
Max. light spot diameter	[mm]	150	
Light spot dimensions refer to		at maximum range	
Polarisation filter available		yes	
Operating conditions			
Ambient temperature	[°C]	-25...60	
Protection		IP 65; IP 67; IP 68	
Tests / approvals			
EMC		EN 60947-5-2	
MTTF	[years]	895	
UL approval		UL Approval no.	E020
Mechanical data			
Weight	[g]	50	
Housing		rectangular	
Dimensions	[mm]	34.8 x 13 x 21	
Materials		housing: stainless steel (316L/1.4404); plastics: PPSU; Sealing: FKM	
Lens material		PMMA	
Lens alignment		side lens	
Tightening torque	[Nm]	1; (screws)	
Displays / operating elements			
Display		switching status	1 x LED, yellow
		operation	1 x LED, green
Remarks			
Remarks		operating voltage "supply class 2" according to cULus	
Pack quantity		1 pcs.	

Electrical connection

Cable: 0.3 m, PUR; 3 x 0.25 mm²

Connector: 1 x M12; coding: A



O6P404

Retro-reflective sensor

O6P-FPKG/0,30m/US

Connection

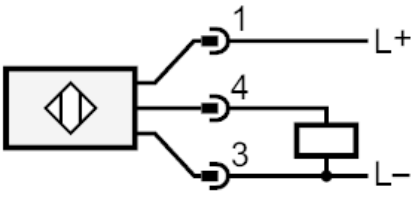

Diagrams and graphs

excess gain graph

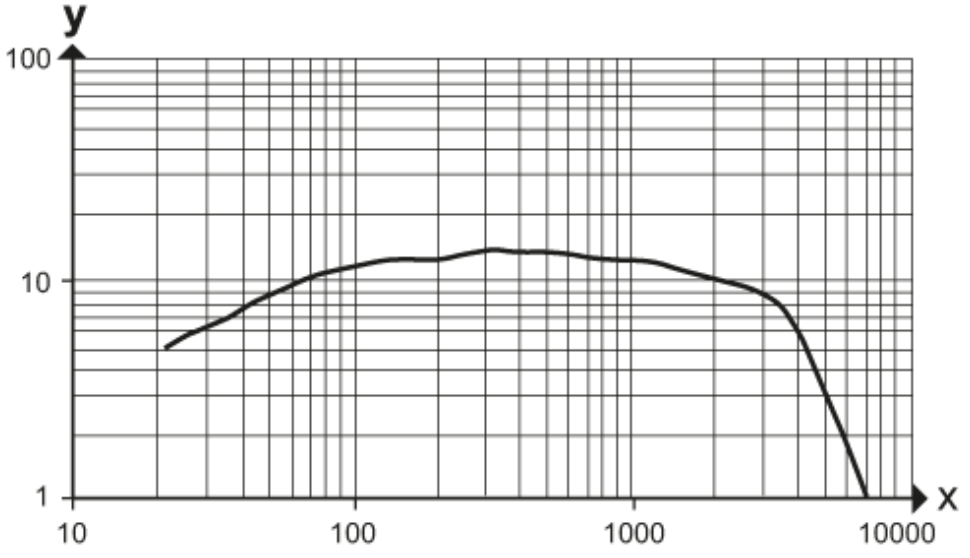

x: distance [mm]

y: excess gain factor