E11250

Connecting cable with socket

ADOGA050MSS0005H04

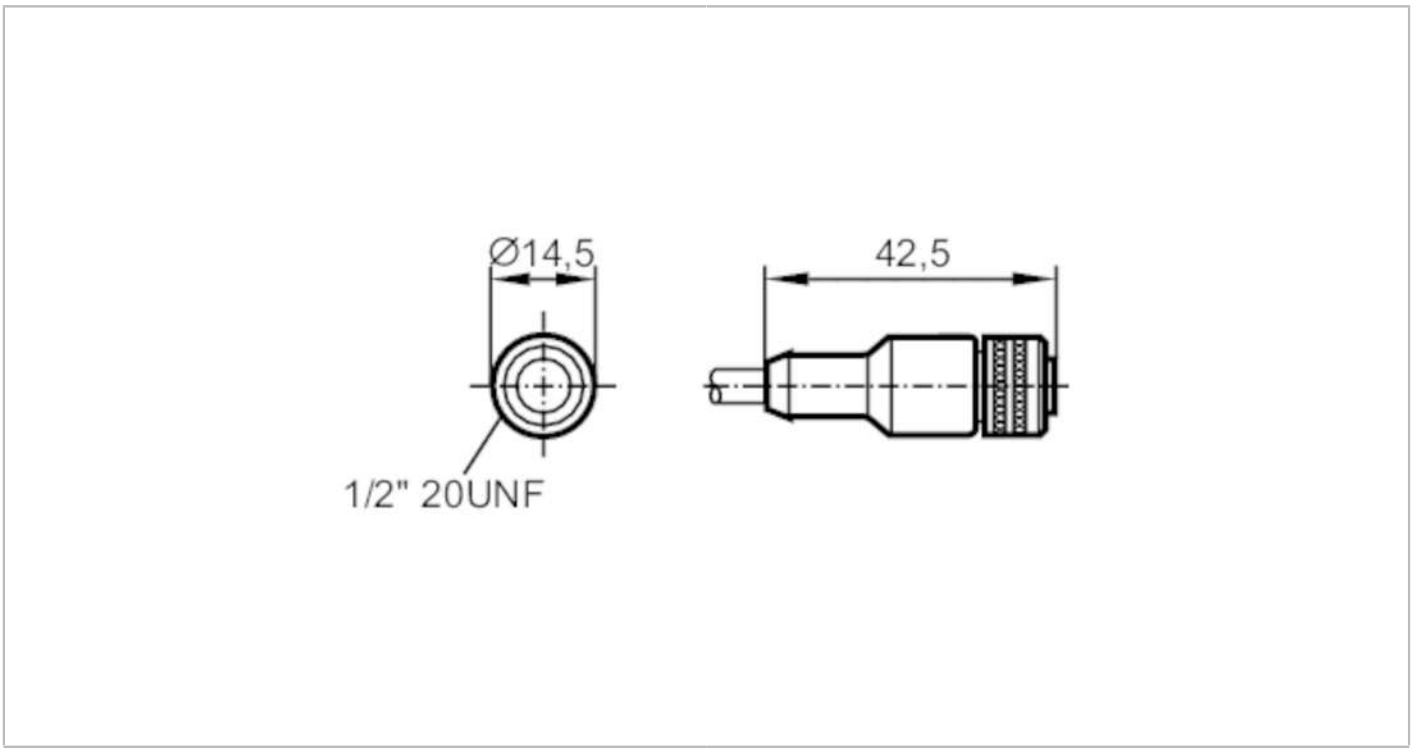

Application		
Special feature		Halogen-free
Electrical data		
Operating voltage	[V]	< 300 AC
Operating conditions		
Ambient temperature	[°C]	-25...90
Protection		IP 67
Mechanical data		
Weight	[g]	315.8
Dimensions	[mm]	14.5 x 14.5 x 42.5
Materials		TPU
Moulded-body material		TPU
Material nut		brass, nickel-plated
Remarks		
Pack quantity		1 pcs.

E11250

Connecting cable with socket

ADOGA050MSS0005H04

Electrical connection

Cable: 5 m, PUR, Halogen-free, black, Ø 4.7 mm; 4 x 0.34 mm² (43 x Ø 0.1 mm)

Electrical connection - socket

Connector: 1 x 1/2", straight; coding: C; Moulded body: TPU; Locking: brass, nickel-plated



Connection

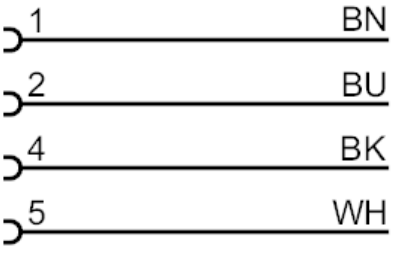

	Core colours :
BK =	black
BN =	brown
BU =	blue
WH =	white