TM4841

Temperature sensor with process connection

TM-150KFEC01- /US/

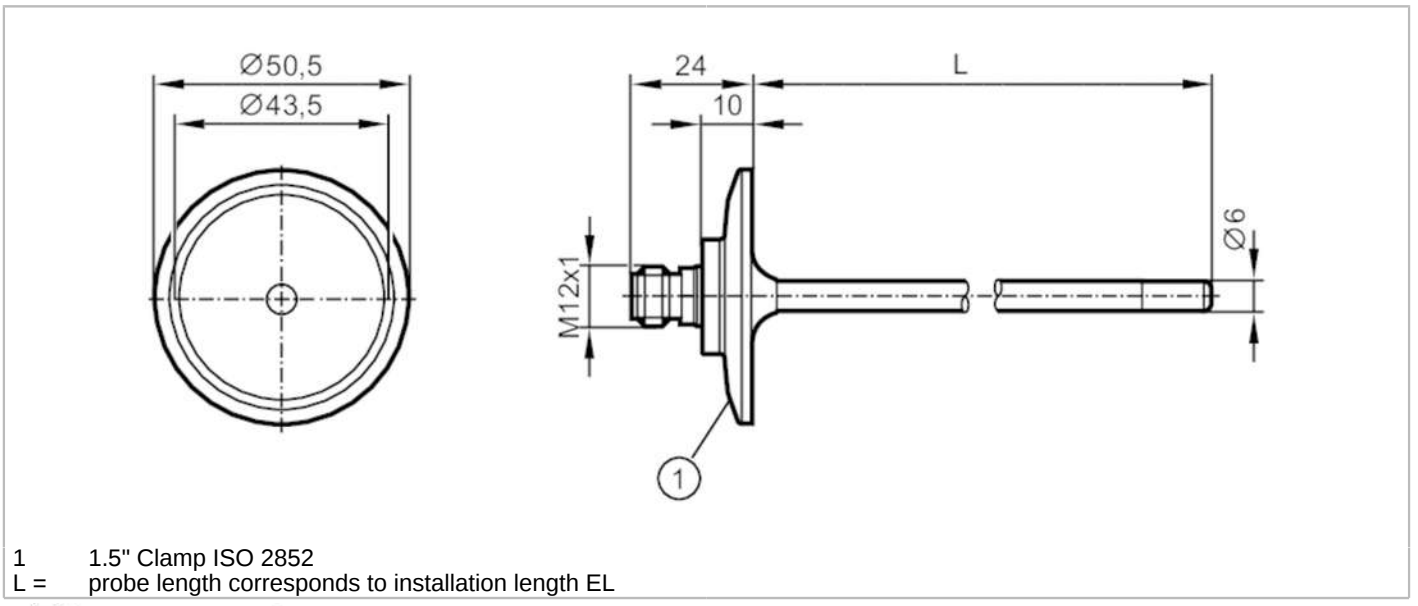

1 1.5" Clamp ISO 2852
L = probe length corresponds to installation length EL

3A CE CRN cULus LISTED EC 1935/2004 EHEDG Certified FCM FDA

Product characteristics			
Measuring range		-40...150 °C	-40...302 °F
Process connection		Clamp DN25...DN40 (1...1,5") DIN 32676 (ISO 2852)	
Installation length EL	[mm]	150	
Application			
Special feature		Gold-plated contacts	
Measuring element		1 x Pt 100; (to DIN EN 60751, class A)	
Application		hygienic systems	
Media		liquids and gases	
Pressure rating		25 bar	2.5 MPa
Minimum installation depth	[mm]	15	
MAWP (for applications according to CRN)	[bar]	50	
Electrical data			
Protection class		III	
Measuring/setting range			
Probe length L	[mm]	150	
Measuring range		-40...150 °C	-40...302 °F
Accuracy / deviations			
Accuracy	[K]	± (0,15 K + 0,002 x|t|)	
Response times			
Dynamic response T05 / T09	[s]	1 / 3; (to DIN EN 60751)	
Operating conditions			
Ambient temperature	[°C]	-25...80	
Storage temperature	[°C]	-40...100	
Protection		IP 68; IP 69K	

TM4841

Temperature sensor with process connection

TM-150KFEC01- /US/

Tests / approvals			
Shock resistance		DIN EN 60068-2-2-27	50 g (11 ms)
Vibration resistance		DIN EN 60068-2-6	10 g (10...2000 Hz)
MTTF	[years]	22831	

Mechanical data		
Weight	[g]	195
Housing		cylindrical
Dimensions	[mm]	Ø 49.8 / L = 174
Materials		stainless steel (316L/1.4404)
Materials (wetted parts)		stainless steel (316L/1.4404) electropolished
Process connection		Clamp DN25...DN40 (1...1,5") DIN 32676 (ISO 2852)
Surface characteristics Ra/Rz of the wetted parts		Ra: < 0.8
Probe diameter	[mm]	6
Installation length EL	[mm]	150

Remarks	
Remarks	operating voltage "supply class 2" according to cULus
	The values for accuracy apply to flowing water.
Pack quantity	1 pcs.

Electrical connection

Connector: 1 x M12; coding: A; Contacts: gold-plated



Connection

