RoHS ✔ c UL us

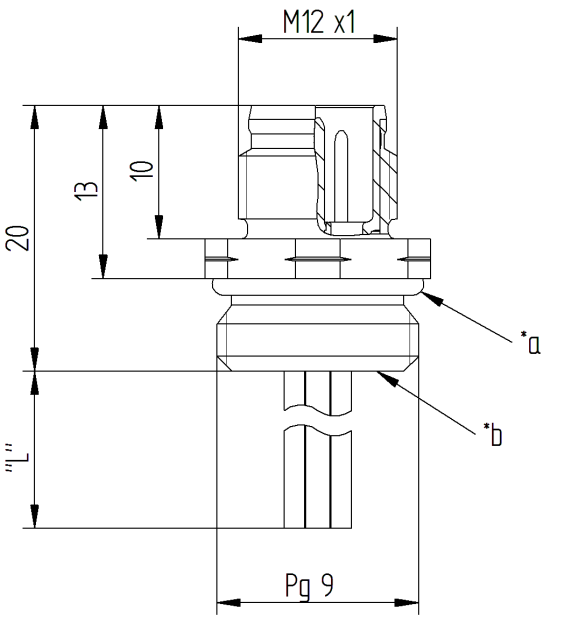

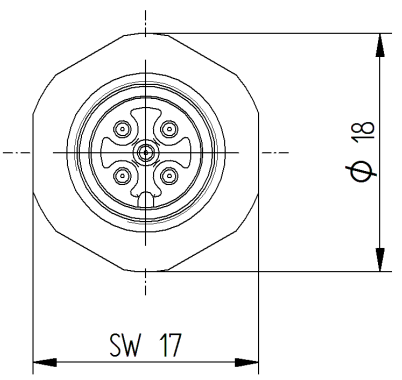

Typ/ type	Kontaktbelegung/ contact assignment		
	Polzahl/ number of poles		Farbkennung/ color code
RSF …	3	4 3 1	1 = braun / *brown*
			3 = blau / *blue*
			4 = schwarz / *black*
	4	4 3 1 2	1 = braun / *brown*
			2 = weiß / *white*
			3 = blau / *blue*
			4 = schwarz / *black*
	5	4 3 1 2 5	1 = braun / *brown*
			2 = weiß / *white*
			3 = blau / *blue*
			4 = schwarz / *black*
			5 = grün-gelb / *green-yellow*

The information/details in this datasheet merely contain general descriptions or performance factors which, when applied in an actual situation, do not always correspond with the described form, and may be amended by way of the further development of products. The desired performance factors shall only be binding if these are expressly agreed on conclusion of the contract.

DIN ISO 5456-2

Product description

Description	- M12 male receptacle connector for front mounting - chassis side thread Pg 9 - FIXCON compatible
Type	RSF …/... M
Type of contacts	male
Number of contacts	3, 4, 5
Standard	IEC 61076-2-101
Construction type	EM with Pg 9 thread

Technical data

Operating voltage	3 / 4 pin: 230 V AC/DC 5 pin: 50 V AC / 60 V DC
Rated voltage	3 / 4 pin: 250 V 5 pin: 60 V (UL: 30 V)
Rated current *	4 A
Rated impulse voltage	3 / 4 pin: 2.5 kV 5 pin: 1.5 kV
Pollution degree	3 acc. to DIN EN 60664-1 (VDE 0110-1)
Contact resistance	≤ 10 mOhm
Insulation resistance	> 10^9 Ohm

* Notice derating

Materials

Housing	CuZn, nickel-plated
Contact bearer	PA, black
Contact	CuZn
Contact plating	Cu/Au
O-ring	FKM

Environmental conditions

Protection class (IEC 60529) *	IP67
Temperature range	-25°C to +85°C, notice derating (UL: max. +50 °C)

Good chemical resistance.
The resistance has to be checked in individual cases.

* only if mounted and locked in combination with Hirschmann / Lumberg connector.
on the installation side tightness has to be assured by taking proper measures

Notes

a* o-ring enclosed separately
b* solder contacts potted with epoxy
"L" = length of control line

further technical information on stranded wires see 908…

Do not connect or disconnect under load.

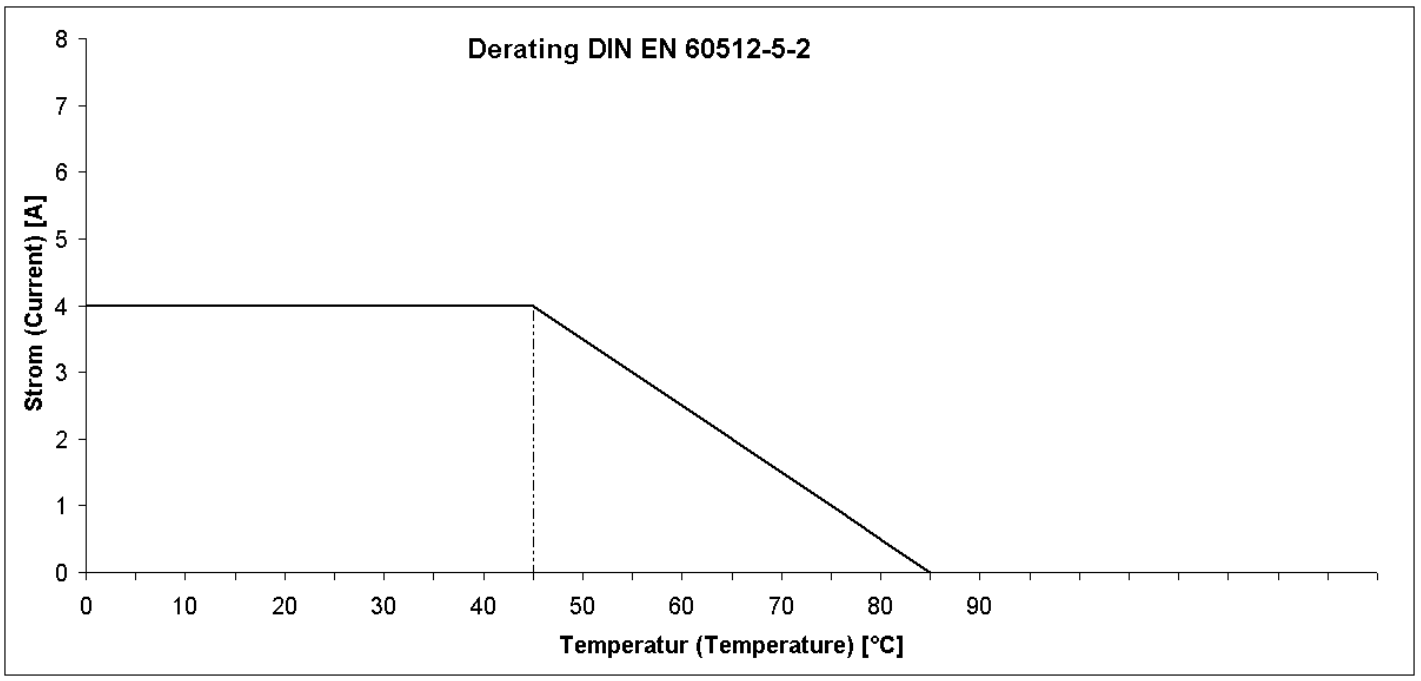

product overview

Article-No.	Type
000-011-621	RSF 3/0,5 M
000-011-629	RSF 4/0,5 M
000-014-255	RSF 4/1 M
000-027-790	RSF 4/0,2 M
000-053-757	RSF 5/0,5 M A
000-076-132	RSF 5/0,5 M unverpackt