THE INFORMATION CONTAINED IN THIS DRAWING IS THE SOLE PROPERTY OF L-COM, INC. ANY REPRODUCTION IN PART OR WHOLE WITHOUT THE WRITTEN PERMISSION OF L-COM, INC. IS PROHIBITED.

REVISIONS			
REV	DESCRIPTION	DATE	APPROVED
E	ECN 7469: CHANGE WASHER MATERIAL FROM BRASS TO STEEL	6/4/14	D.FRISIELLO

DESCRIPTION	MATERIAL	FINISH
BODY	BRASS	NICKEL PLATE
INSULATOR	ACETAL	WHITE
CENTER PIN	BRASS	GOLD PLATE
WASHER	STEEL	NICKEL PLATE
NUT	BRASS	NICKEL PLATE

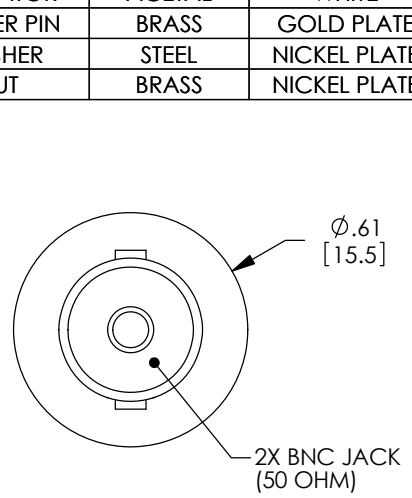

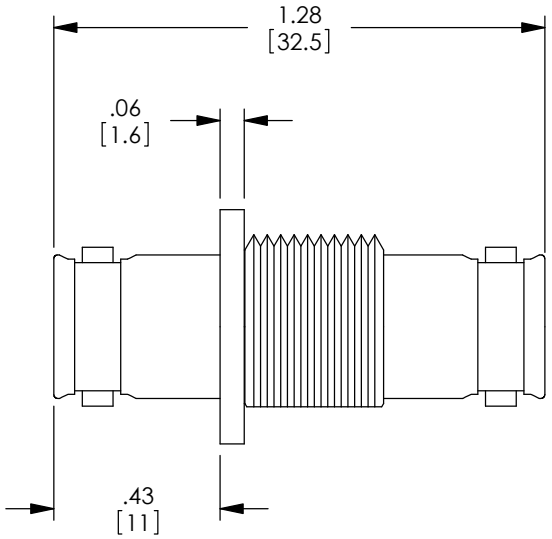

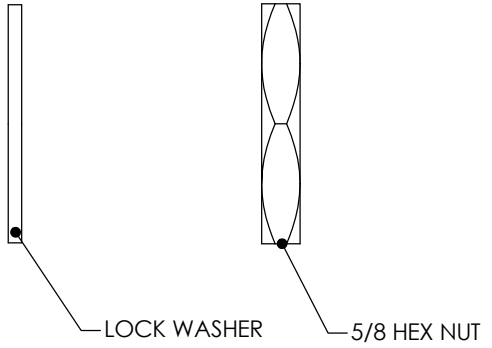

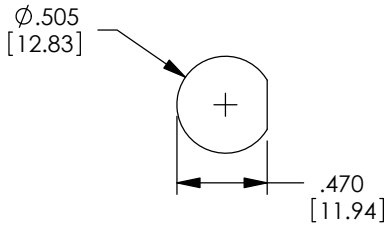

RECOMMENDED
PANEL OPENING

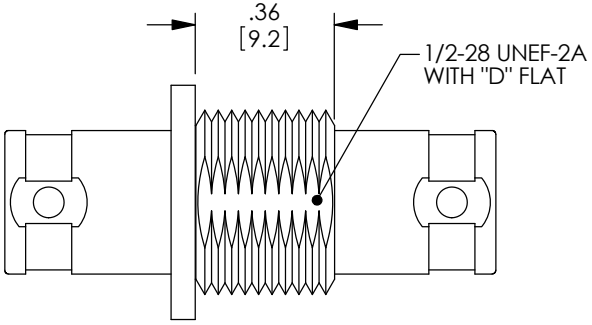

NOTES:

ALL DIMENSIONS ARE FOR REFERENCE ONLY.

COMPONENT SHALL BE INDIVIDUALLY PACKAGED IN ACCORDANCE WITH L-COM SPECIFICATION PS-0031.

REGULATORY COMPLIANCE:
CE2011/65/EU(RoHS DIRECTIVE)

UNLESS OTHERWISE SPECIFIED,
DIMENSIONS ARE IN INCHES [mm]
OVERALL CABLE LENGTH TOLERANCE:
≤12 [305] = +1 [25] / -0
>12 [305] ≤60 [1524] = +2 [51] / -0
>60 [1524] ≤120 [3048] = +4 [102] / -0
>120 [3048] ≤300 [7620] = +6 [152] / -0
>300 [7620] = +5% / -0%
ALL OTHER DIMENSIONAL TOLERANCES:
.X = ± .2 [5.08]
.XX = ± .02 [.51]
.XXX = ±.005 [.13]
PROJECTION

APPROVALS		DATE
DRAWN BY	MCCORMICK	05/01/01
CHECKED BY	D.PARHAM	05/10/01
APPROVED BY	R.CARRICK	05/10/01

CONFIGURATION DETAILS OF UNDIMENSIONED FEATURES MAY VARY

COLOR VARIATIONS MAY OCCUR

1AB05-108

L-COM Global Connectivity
45 BEECHWOOD DRIVE
NORTH ANDOVER, MA
01845

CATEGORY
COAXIAL

PRODUCT DESCRIPTION
BNC F-F BULKHEAD ADAPTER 50 OHM

SIZE	FSCM NO.	DWG. NO.	REV.
A	43321	BA1087	E

SCALE: NONE | CAD FILE: BA1087.SLDDRW | SHEET 1 OF 1