DX2045

Multifunction display for monitoring analogue standard signals

DISPLAY/AX460/IO-Link/AC/DC

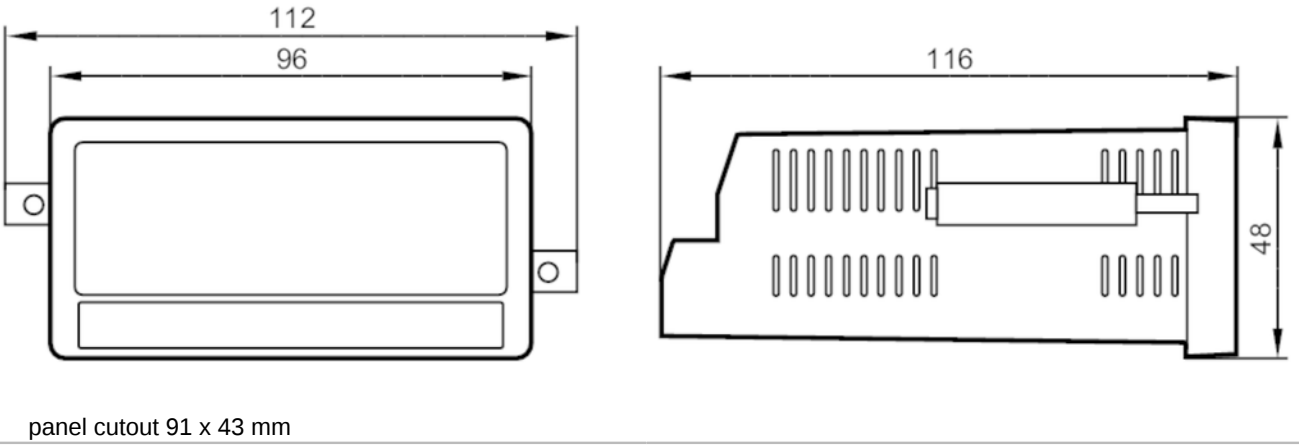

panel cutout 91 x 43 mm

Product characteristics		
Communication interface		IO-Link
Housing		housing for panel mounting
Dimensions	[mm]	48 x 112 x 116
Application		
Application		displaying and monitoring analogue signals; e.g. pressure sensors, temperature sensors or flow sensors
Electrical data		
Frequency AC	[Hz]	50...60
Operating voltage	[V]	115...230 AC / 18...30 DC
Current consumption	[mA]	100
Power consumption	[W]	3
Inputs / outputs		
Number of inputs and outputs		Number of analogue inputs: 2; Number of digital outputs: 4
Inputs		
Number of analogue inputs		2; (Spannungs- oder Stromeingang)
Analogue input (current)	[mA]	0...20
Analogue input (voltage)	[V]	-10...10
Resolution of analogue input		16 bit
Precision analogue input	[%]	0,1
Outputs		
Number of digital outputs		4
Max. current load per output	[mA]	200
Overload protection		yes
Interfaces		
Communication interface		IO-Link
Transmission type		COM3 (230,4 kBaud)
IO-Link revision		1.1
Required master port type		A

DX2045

Multifunction display for monitoring analogue standard signals

DISPLAY/AX460/IO-Link/AC/DC

Min. process cycle time	[ms]	3	
Operating conditions			
Ambient temperature	[°C]	-20...60	
Storage temperature	[°C]	-25...70	
Protection		IP 65	
Protection rating terminals		IP 20	
Tests / approvals			
EMC		EN 61000-6-2	
		EN 61000-6-3	
		EN 61000-6-4	
Mechanical data			
Weight	[g]	369	
Housing		housing for panel mounting	
Type of mounting		installation in panels or panel cutouts; (panel cutout: 91 x 43 mm)	
Dimensions	[mm]	48 x 112 x 116	
Materials		Noryl UL94-V-0	
Displays / operating elements			
Display		colour display	full graphic LCD display, touch screen
Electrical connection			
screw terminals:			
Connection			

