22311 E

SKF Explorer

Dimensions

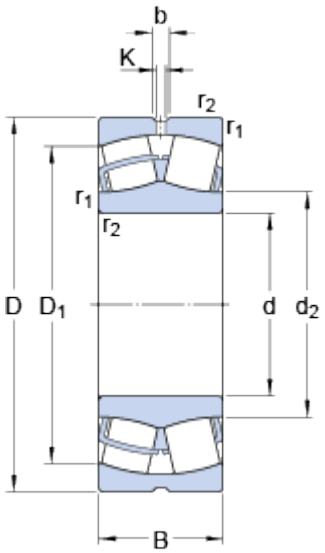

d		55	mm
D		120	mm
B		43	mm
d_2	≈	70.1	mm
D_1	≈	102	mm
b		5.5	mm
K		3	mm
$r_{1,2}$	min.	2	mm

Abutment dimensions

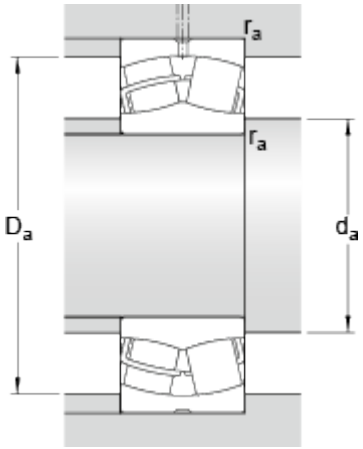

d_a	min.	66	mm
D_a	max.	109	mm
r_a	max.	2	mm

Calculation data

Basic dynamic load rating	C	280	kN
Basic static load rating	C_0	280	kN
Fatigue load limit	P_u	30	kN
Reference speed		4300	r/min
Limiting speed		5600	r/min
Calculation factor	e	0.35	
Calculation factor	Y_1	1.9	
Calculation factor	Y_2	2.9	
Calculation factor	Y_0	1.8	

Mass

Mass	2.45	kg