Digital linear actuators 92000 series DLA's

The range of DLA's comprise two versions. Both types are based on 4 phase permanent magnet stepper motor technology and utilise a rotor with an internal thread to provide linear motion via a leadscrew.



The **L92000 series** are provided with a leadscrew which may be attached to the driven mechanism. When the leadscrew is prevented from rotating the operation of the motor imparts linear motion to the screw. The maximum travel of the mechanism is between 47 & 76 mm depending on the model although optional 300 mm long leadscrews may be purchased to increase travel distance if required.

The **K92000** series incorporate a keyway in the actuator's output slideway thereby providing the spindle with linear motion. This design is ideal for driving spring loaded mechanisms over limited travel.

Typical performance

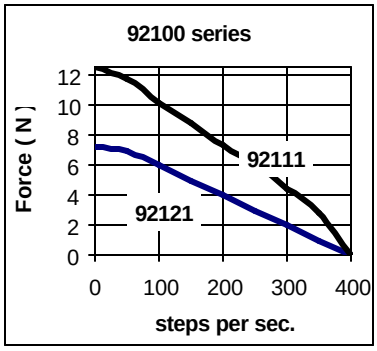



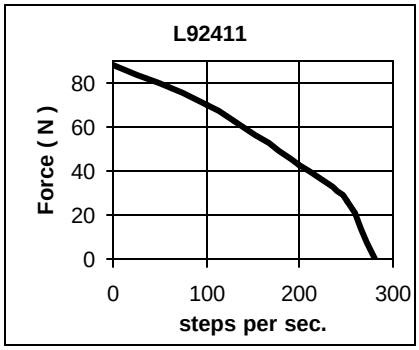

The above performance describes pull-in (start/stop) operation when the actuators are driven with an L/R drive. Increased performance can be obtained with L/4R drive techniques using drives such as the EM162 series

Specification

Standard models		**L92121-P2** **K92121-P2**	**L92111-P1**	**L92211-P2** **K92211-P2**	**L92411-P2**
Maximum linear force	N	7.23	12.5	20.9	88
Min. holding force (de-energised)	N	11.13	16.6	11.13	88
Linear travel per step	ins./mm	0.002 / 0.0508	0.001 / 0.0254	0.001 / 0.0254	0.001 / 0.0254
Typical backlash	Steps	2	2	2	2
Maximum linear travel:					
L92000 series using standard screw	mm	47.6	47.6	47.6	76.2
using extended screw	mm	259	259	215	233
K92000 series	mm	12.7	N / A	22.2	N / A
Maximum Pull-in rate	Steps/sec.	380	425	425	275
Maximum Pull-out rate	Steps/sec.	650 *	700 *	700 *	400 *
Bearing construction		Radial Ball	Radial Ball	Radial Ball	Radial Ball
Mass	Kg	0.0425	0.0425	0.198	0.45
Nominal Voltage (L/R Drive)	Vdc	12	5	12	12
Resistance per phase	Ohms	84	15	58	25
Current per phase	Amps	0.146	0.333	0.208	0.453
Inductance per phase	mH	29	5.0	30	25
Suitable drives		SAA 1027 MSE422 EM162	MSE422 EM162 TM162C	SAA 1027 MSE422 EM162	MSE422 MSE542 EM162 TM162C

Note* Higher step rates may be achieved using L/4R current forcing techniques.
Alternative low inductance models are available to special order.

Dimensions mm.

92100 series

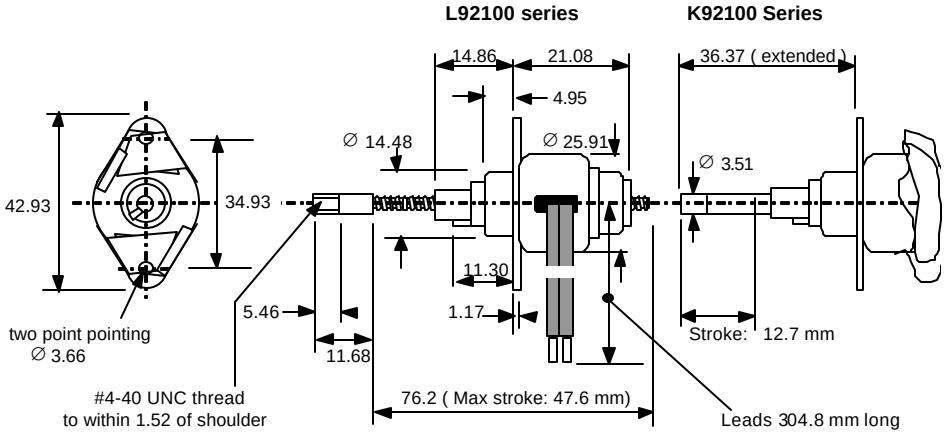

92200 series

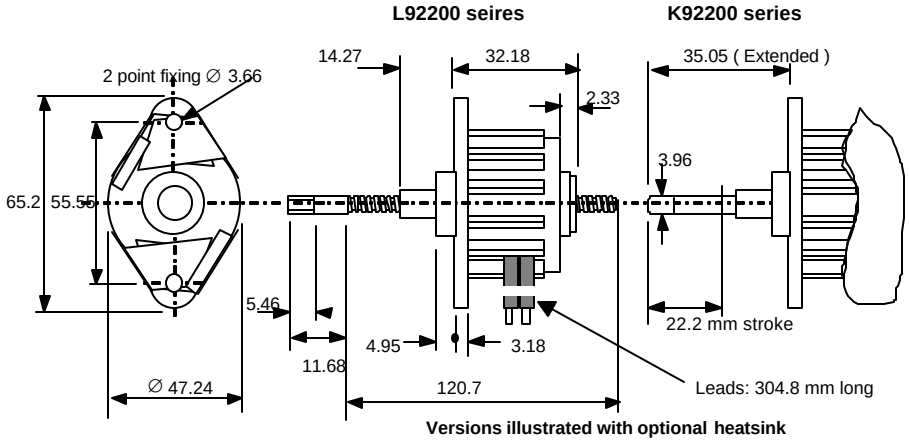

Versions illustrated with optional heatsink

92400 series

L92400 series with optional heatsink

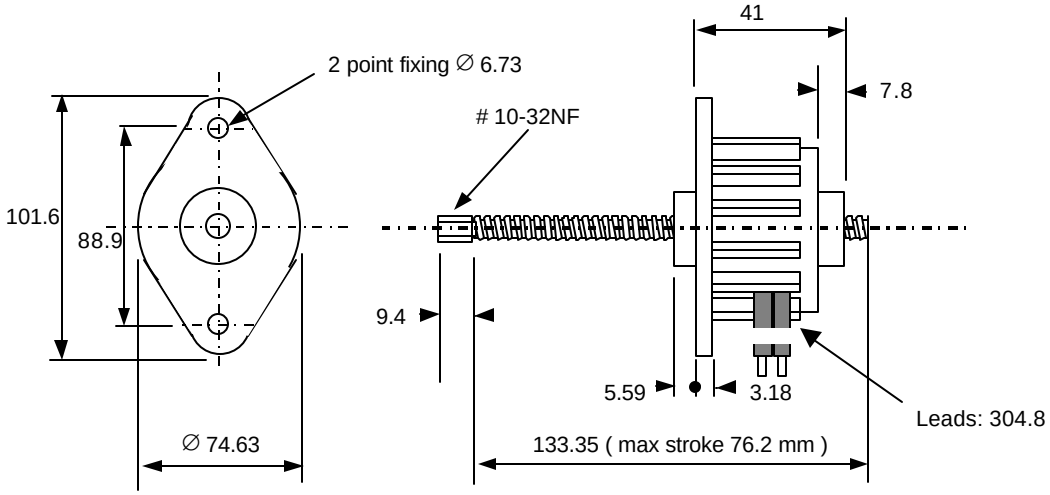

Optional Leadscrews for 'L' series actuators:

Optional 300 mm long Leadscrews may be ordered separately to extend the stroke of 'L' series actuators

