OG0035

Diffuse reflection sensor

OGT-HBOA/LS-100-GK

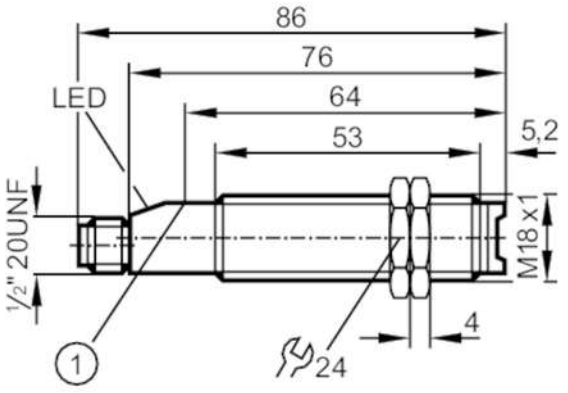

1 pushbutton

Product characteristics		
Type of light		infrared light
Housing		threaded type
Application		
Function principle		Diffuse reflection sensor
Electrical data		
Frequency AC	[Hz]	47...63
Operating voltage	[V]	20...250 AC/DC
Protection class		II
Reverse polarity protection		no
Type of light		infrared light
Wave length	[nm]	880
Outputs		
Output function		light-on mode
Max. voltage drop switching output DC	[V]	8
Max. voltage drop switching output AC	[V]	8
Minimum load current	[mA]	5
Max. leakage current	[mA]	1.7
Permanent current rating of switching output AC	[mA]	90; (180 (...40 °C))
Permanent current rating of switching output DC	[mA]	90; (180 (...40 °C))
Short-time current rating of switching output	[mA]	600; (20 ms / 0,5 Hz)
Switching frequency AC	[Hz]	25
Switching frequency DC	[Hz]	25
Short-circuit proof		no
Overload protection		no

OG0035

Diffuse reflection sensor

OGT-HBOA/LS-100-GK

Detection zone			
Range	[mm]	1...600; (white paper 200 x 200 mm 90% remission)	
Range adjustable		yes	
Max. light spot diameter	[mm]	169	
Light spot dimensions refer to		at maximum range	
Operating conditions			
Ambient temperature	[°C]	-25...80	
Protection		IP 67	
Tests / approvals			
EMC		EN 60947-5-2	
		EN 55011	class B
MTTF	[years]	338	
Mechanical data			
Weight	[g]	27.5	
Housing		threaded type	
Dimensions	[mm]	M18 x 1 / L = 76	
Thread designation		M18 x 1	
Materials		PBT	
Lens material		PMMA	
Displays / operating elements			
Display		switching status	1 x LED, red
		function	1 x LED, red flashing
Electrical connection			
Required protection		miniature fuse to IEC60127-2 sheet 1; ≤ 2 A; fast acting	
Accessories			
Items supplied		lock nuts: 2	
Remarks			
Remarks		Recommendation: Check the safe functioning of the unit after a short circuit.	
Pack quantity		1 pcs.	

Electrical connection

Connector: 1 x 1/2"; coding: C

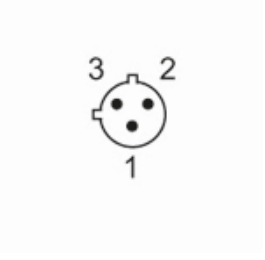

OG0035

Diffuse reflection sensor

OGT-HBOA/LS-100-GK

Connection

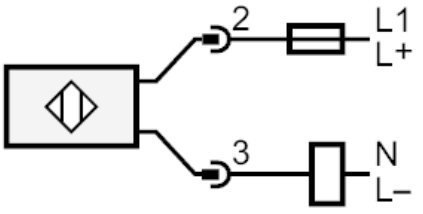

Note : miniature fuse to IEC60127-2 sheet 1 ≤ 2 A fast acting

Diagrams and graphs

excess gain graph

