Foot-switch
Series F1

Description **F1-ZSD**	Article number **6061500559**

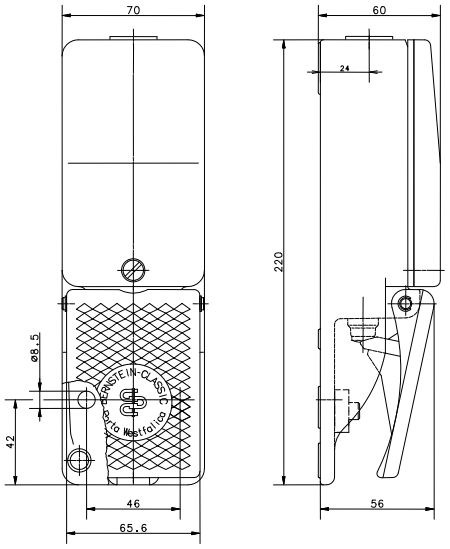

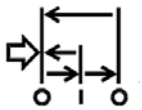

Switching symbol
(Three-Step-Safety Switch)

1. position
Off-position



2. position
On-position

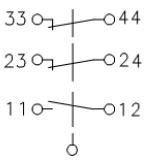

To reach the 3rd position, the tactile touch has to be surmounted.

3. position
Off-position
with positive opening

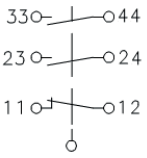

Operating diagramme

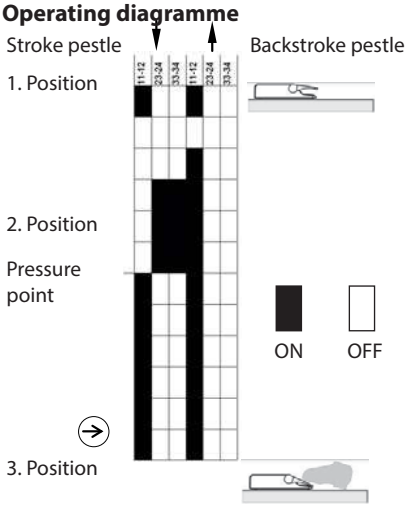

Electrical Data		
Rated insulation voltage	U_i	250 V
Conv. thermal current	I_{the}	5 A
Rated impulse withstand voltage	U_{imp}	2,5 KV
Rated operational voltage	U_e	240 V AC and 24 V DC
Utilization category		AC-15, U_e /I_e 240 V AC / 1,5 A 50-60 Hz DC-13, U_e /I_e 24 V DC/ 1,0 A
Direct opening action	⊖	acc. to IEC/EN 60947-5-1, annex K (pedal stop)
Short-circuit protective device		D-Fuse 4 A gG
Protection class		I

Mechanical data		
Enclosure		AL, die-cast
Protective guard (Accident protection cover UN)		AL, die-cast
Actuator		Foot lever (PA)
Ambient air temperature		Operating temperature range: -10 °C to +50 °C Storage temperature range: -25 °C to +70 °C
Contact type (each pedal)		1 NC, 2 NO. (Zb)
Operating force (pedal centre)	1. position 2. position	10 N 25 N
Pressure point (each pedal)		≈ 200 N
Mechanical life (each pedal) Sequence of the switching position: 1 – 2 – 1 or: 1– 2 – 3 – 1		 10 x 10^6 operating cycles 1 x 10^6 operating cycles
Switching frequency		max. 30/min
Assembly		2 x M8
Connection		screw connections (M3,5)
Protection ground		2 x M4
Conductor cross-sections		Solid: 0,5 ... 1,5 mm^2 Litz wire with ferrules: 0,5 ... 1,5 mm^2
Cable entrance		1 x M20 x 1,5
Weight		≈ 1,6 kg
Protection type		IP67 in accordance with IEC/EN 60529

ID for safety engineering		
B10d Sequence of the switching position: 1 – 2 – 1 or: 1– 2 – 3 – 1		 10 x 10^6 cycles 1 x 10^6 cycles

Regulations	
	VDE 0660 T100, DIN EN 60947-1, IEC 60947-1
	VDE 0660 T200, DIN EN 60947-5-1, IEC 60947-5-1
	DIN EN 61326-3-1
	DIN EN ISO 13849-1

EU Conformity	
	acc. to directive 2006/95/EG

Approvals	
	DGUV
	$_{c}UL_{US}$

Function

Normally open contacts: 23 – 24, 33 – 44; Signalling contact: 11 – 12
- Position 1: OFF position of the operating contacts (the pedal is not actuated)
- Position 2: ON position of the operating contacts (the pedal is actuated to as far as the pressure point)
- Position 3: OFF position of the operating contacts (the pedal is fully actuated)

If the three-stage enable switch is actuated in position 2, it returns to position 1 when it is released. The threestage enable switch changes from position 2 to position 3, if it gets further pressed unter after the resistance of the pressure point.
The actuation of the operating contacts is made by a positive opening.
Once the pedal is not pressed, the three-stage enable switch returns to position 1.
The operating contacts are opened in the return stroke.

Notes

The specified protection classification (IP code) applies only when the cover is closed and the appropriate cable is used, in accordance with the clamping range of the above mentioned cable gland.