E12552

Y connection cable

YDOGS040PLS0001H02

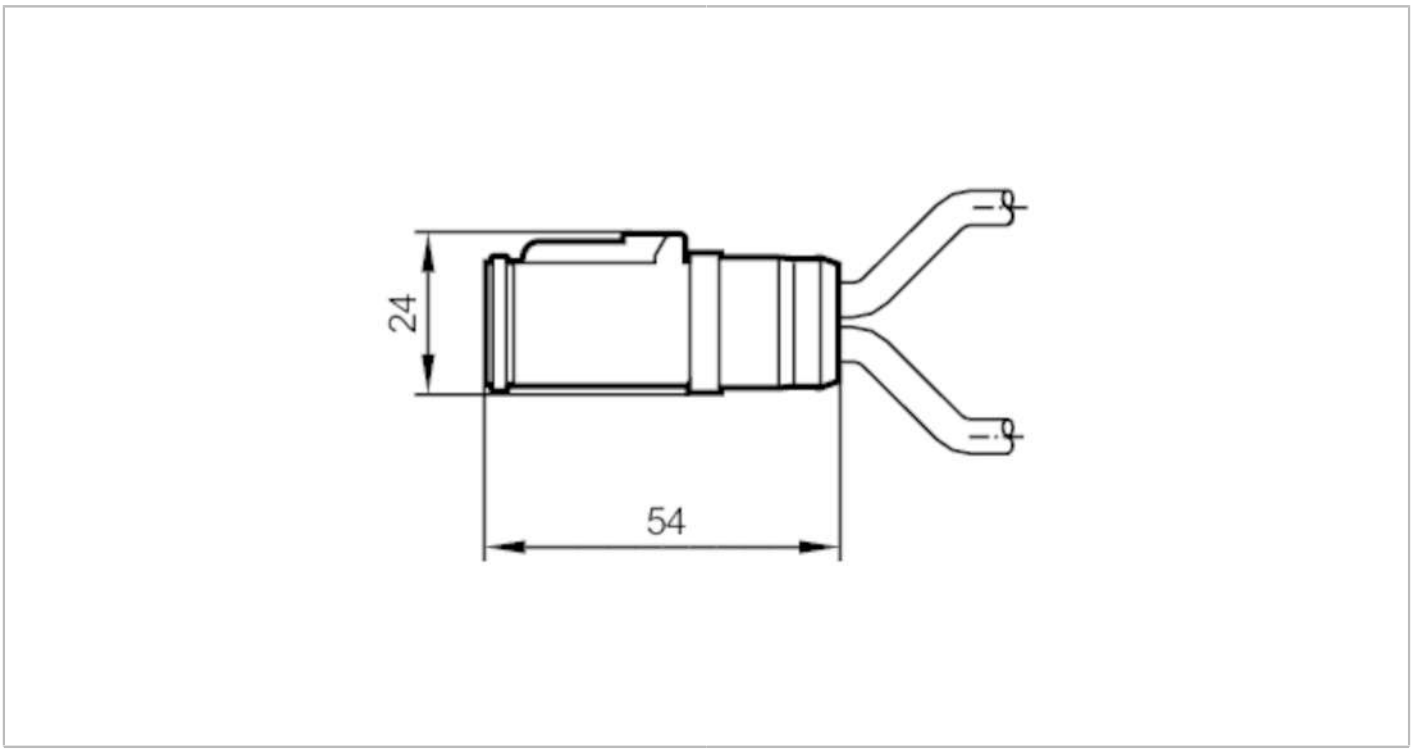

CE

Application		
Special feature		Free from silicone; Halogen-free; Drag chain suitability
Free from silicone		yes
Electrical data		
Operating voltage	[V]	8...32 DC
Protection class		III
Max. current load total	[A]	4
Operating conditions		
Ambient temperature	[°C]	-40...85
Ambient temperature (moving)	[°C]	-20...85
Protection		IP 67; (mating connector plugged in)
Mechanical data		
Weight	[g]	86.2
Dimensions	[mm]	24 x 24 x 54
Materials		PA
Number of ports splitter box		2
Drag chain suitability		yes
Drag chain suitability	bending radius for flexible use	min. 10 x cable diameter
	travel speed	max. 3.3 m/s for a horizontal travel length of 5 m and max. acceleration of 5 m/s²
	bending cycles	> 5 Mio.
	torsional strain	± 180 °/m

E12552

Y connection cable

YDOGS040PLS0001H02

Remarks	
Pack quantity	1 pcs.

Electrical connection

Cable: 1 m, PUR, Halogen-free, black, Ø 5.4 mm; 2 x 0.50 mm² (28 x Ø 0.15 mm)

Electrical connection - socket

Connector: 1 x DEUTSCH connector, straight; Contacts: nickel-plated

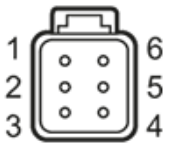

Connection

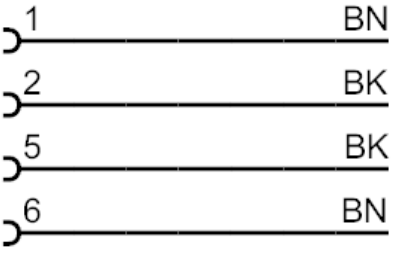

	Core colours :
BK =	black
BN =	brown