Top View of Assembly

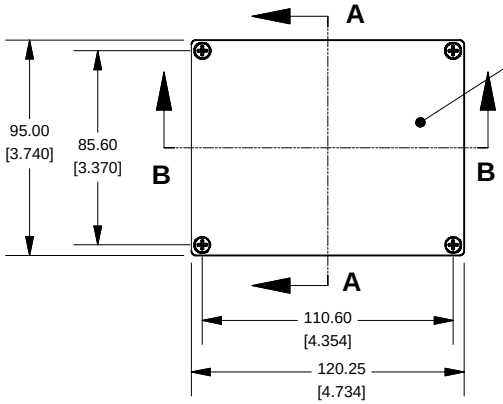

SECTION A-A
End View of Assembly

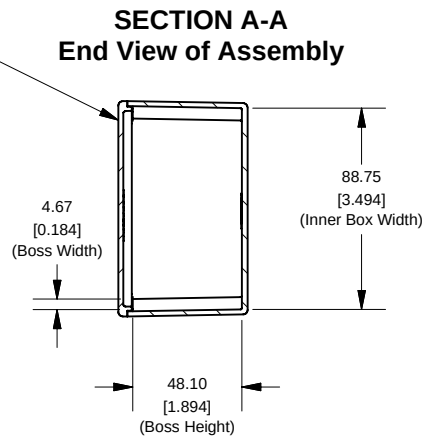

SECTION B-B
Side View of Assembly

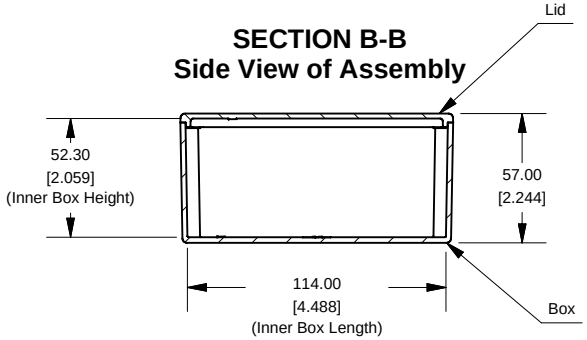

Lid

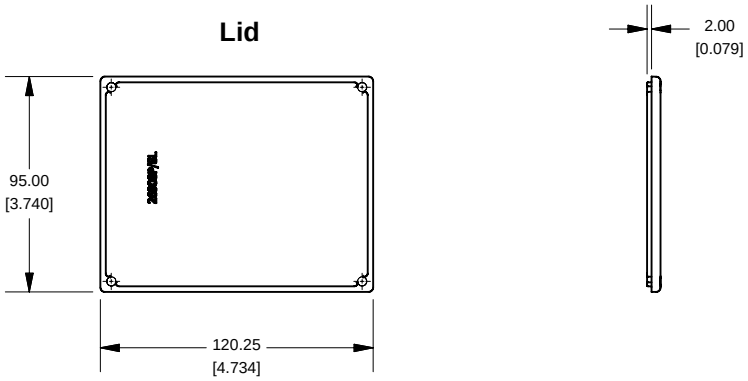

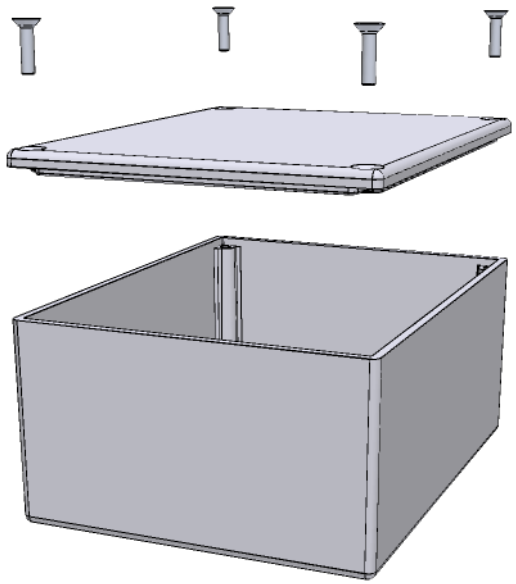

Enclosures can be Factory Modified (Milling, Drilling, Printing etc.)
Solid models of this enclosure available in STEP or IGES.
Contact Factory jelkins@hammond-electronics.co.uk

NOTE
Purchased assembly includes Lid, Box and 4 cover screws.

Eddystone 26908PSLA	
PART INFORMATION	
Part Number:	26908PSLA
Material:	LM2 / LM24 Diecast Aluminum Alloy
Cover Screw Type:	M3.5 x 10mm Countersunk (Screw Torque 75 oz f.in or 55 cN. m)

HAMMOND MANUFACTURING™

26908PSLA

www.hammondmfg.com