Product datasheet
Characteristics

ZCKE096
limit switch head ZCKE - w/o lever stay put left or right actuation - -40 °C

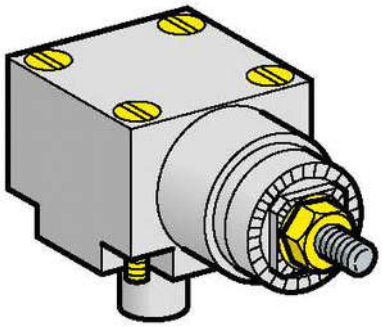

Main

Range of product	OsiSense XC
Series name	Standard format
Product or component type	Limit switch head
Device short name	ZCKE
Head type	Rotary head
Product compatibility	XCKJ
Associated body	ZCKJ1 ZCKJ11 ZCKJ11H29 ZCKJ11H7 ZCKJ1H29 ZCKJ1H7 ZCKJ2 ZCKJ21 ZCKJ21H29 ZCKJ21H7 ZCKJ2H29 ZCKJ2H7 ZCKJ9 ZCKJ9H29 ZCKJ9H7 ZCKJD31 ZCKJD31H29 ZCKJD31H7 ZCKJD39 ZCKJD39H29 ZCKJD39H7
Movement of operating head	Rotary
Type of operator	Stay put without operating lever stay put
Type of approach	Lateral approach 2 directions

Complementary

Switch actuation	From left and right
Positive opening	With
Product weight	0.19 kg
Head material	Metal

Environment

Ambient air temperature for operation	-40...20 °C
Ambient air temperature for storage	-25...70 °C
Environmental characteristic	Low temperature

Offer Sustainability

Sustainable offer status	Not Green Premium product
RoHS	Will be Compliant on 4Q2012 Will be Compliant on 4Q2012
REACh	Reference not containing SVHC above the threshold
Product environmental profile	Available
Product end of life instructions	Need no specific recycling operations

The information provided in this documentation contains general descriptions and/or technical characteristics of the performance of the products contained herein.
This documentation is not intended as a substitute for and is not to be used for determining suitability or reliability of these products for specific user applications.
It is the duty of any such user or integrator to perform the appropriate and complete risk analysis, evaluation and testing of the products with respect to the relevant specific application or use thereof.
Neither Schneider Electric Industries SAS nor any of its affiliates or subsidiaries shall be responsible or liable for misuse of the information contained herein.