E18232

Connecting cable with socket

ADOGA030VAS0005E03

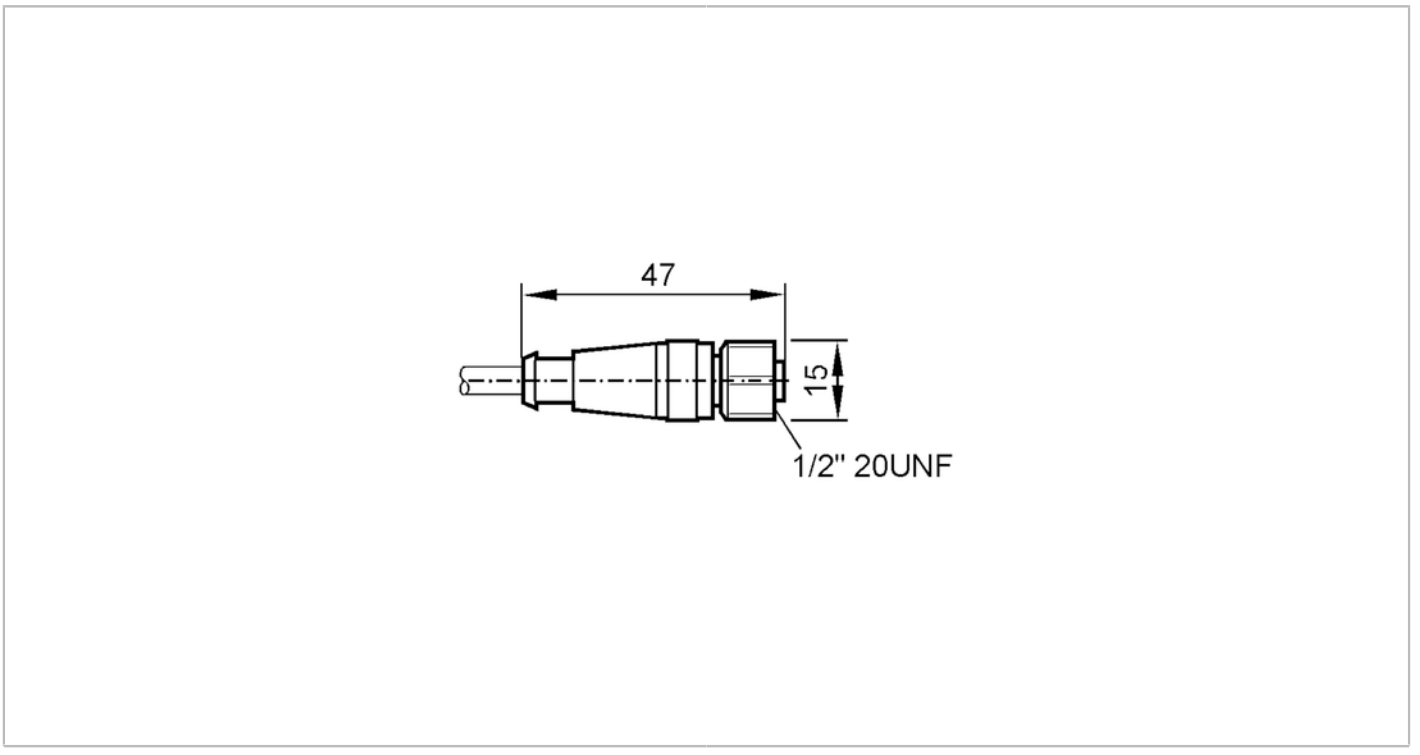

Application		
Special feature		Gold-plated contacts
Electrical data		
Operating voltage	[V]	< 300 AC/DC
Operating conditions		
Ambient temperature	[°C]	-20...105
Protection		IP 68
Mechanical data		
Weight	[g]	488.5
Materials		PVC
Moulded-body material		PVC
Material nut		stainless steel (1.4571/316Ti)
Remarks		
Pack quantity		1 pcs.

E18232

Connecting cable with socket

ADOGA030VAS0005E03

Electrical connection

Cable: 5 m, PVC, grey; 3 x 0.75 mm² / AWG 18

Electrical connection - socket

Connector: 1 x 1/2", straight; coding: C; Moulded body: PVC; Locking: stainless steel (1.4571/316Ti); Contacts: gold-plated

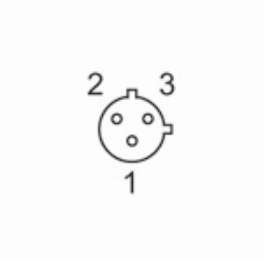

Connection

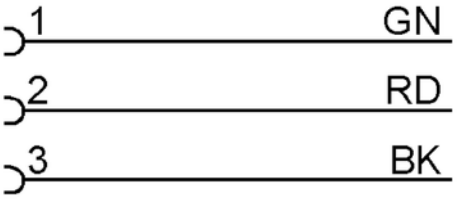

	Core colours :
BK =	black
GN =	green
RD =	red