FMAC ECO

Ultra compact and efficient 1-stage filter in ECO design for 3-phase systems



Description
- Screw-on mounting on chassis, upright or lengthwise
- High attenuation value,
- Protection class I
- Bolts and nuts
- Cost optimized filter design with excellent price / perfomance ratio
- Very light due to partial potting

Approvals
- VDE Certificate Number: 40028851
- UL File Number: pending

Characteristics
- Voltage rating 480 VAC for world wide acceptance
- Especially designed for industrial applications such as: Frequency Converters, Stepper Motor Drives, UPS-Systems, Inverters
- Suitable for use in equipment according to IEC/UL 60950

Weblinks
pdf-datasheet, html-datasheet, General Product Information, Approvals, CE declaration of conformity, RoHS, CHINA-RoHS, REACH, e-Shop, SCHURTER-Stock-Check, Distributor-Stock-Check, Detailed request for product

Dimension
Case 1C

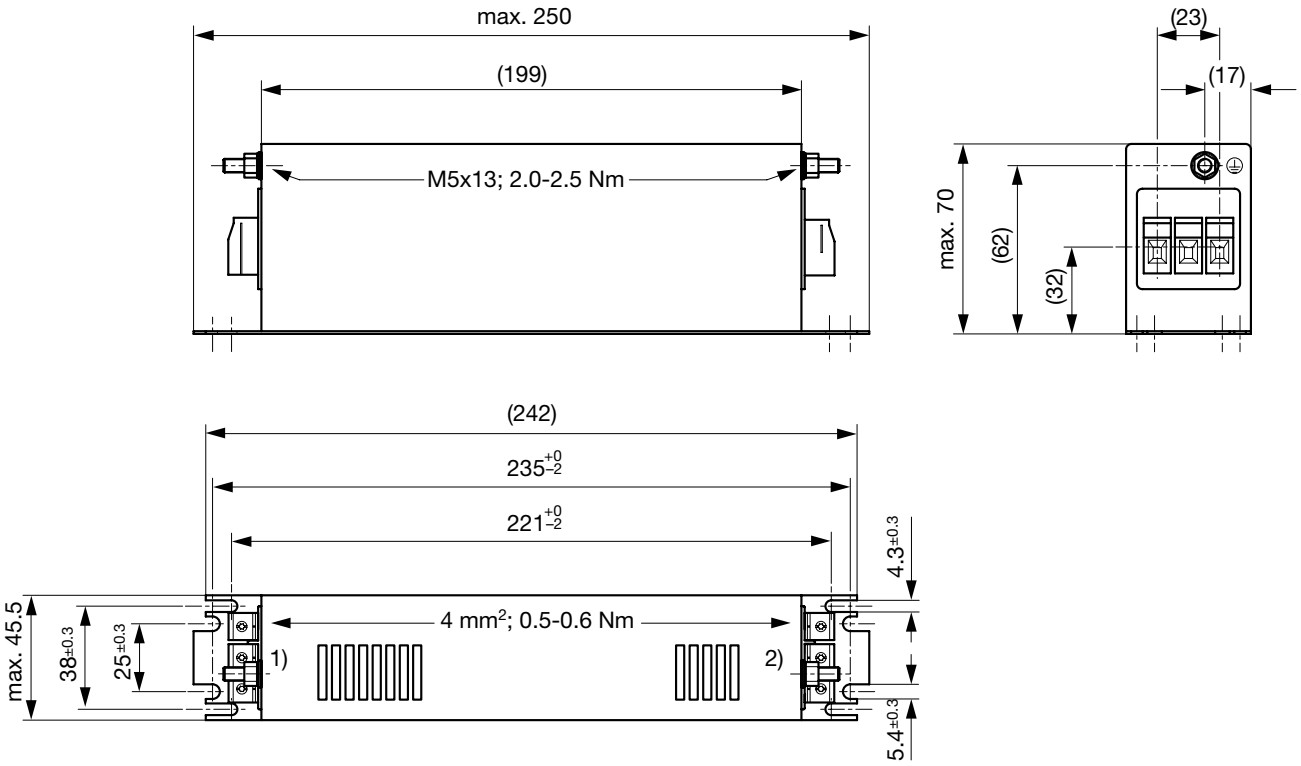

1) Line
2) Load

Case 1D-6

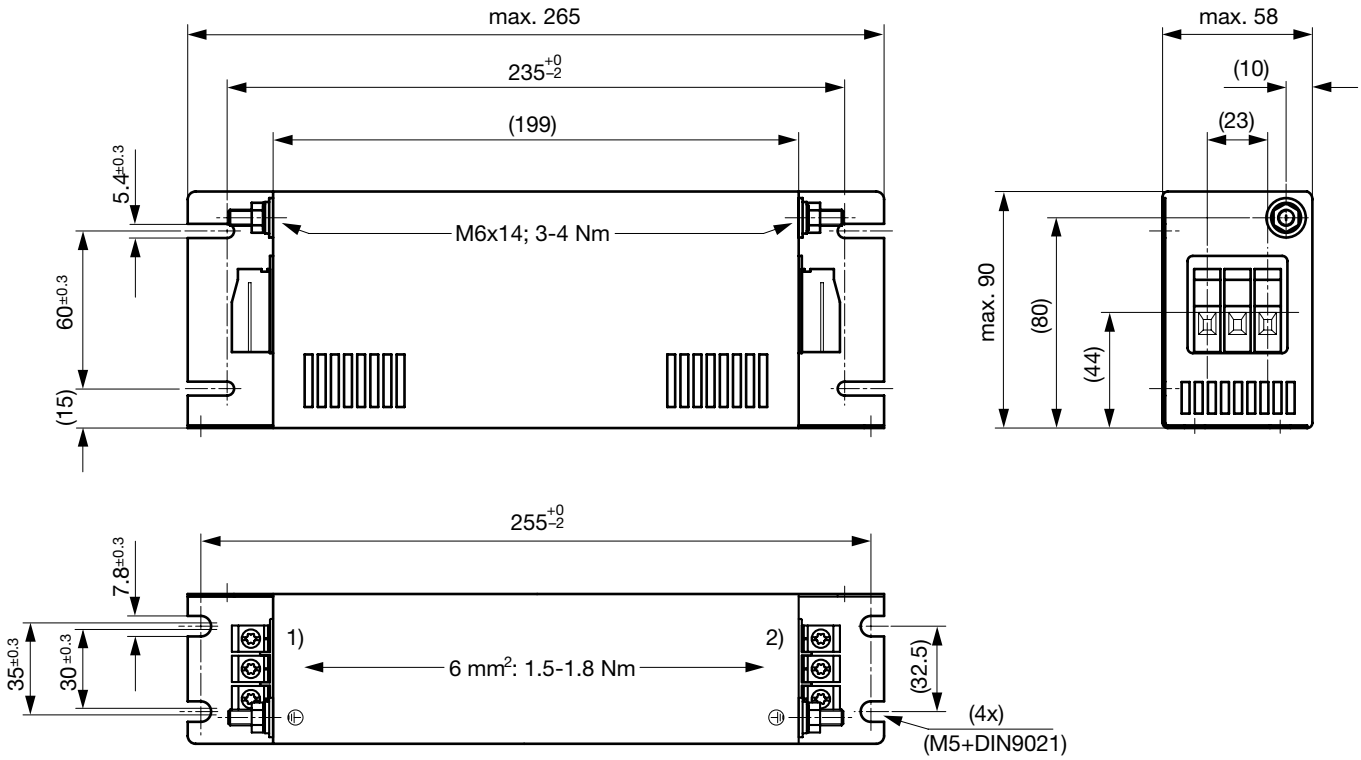

1) Line
2) Load

Case 1D-10

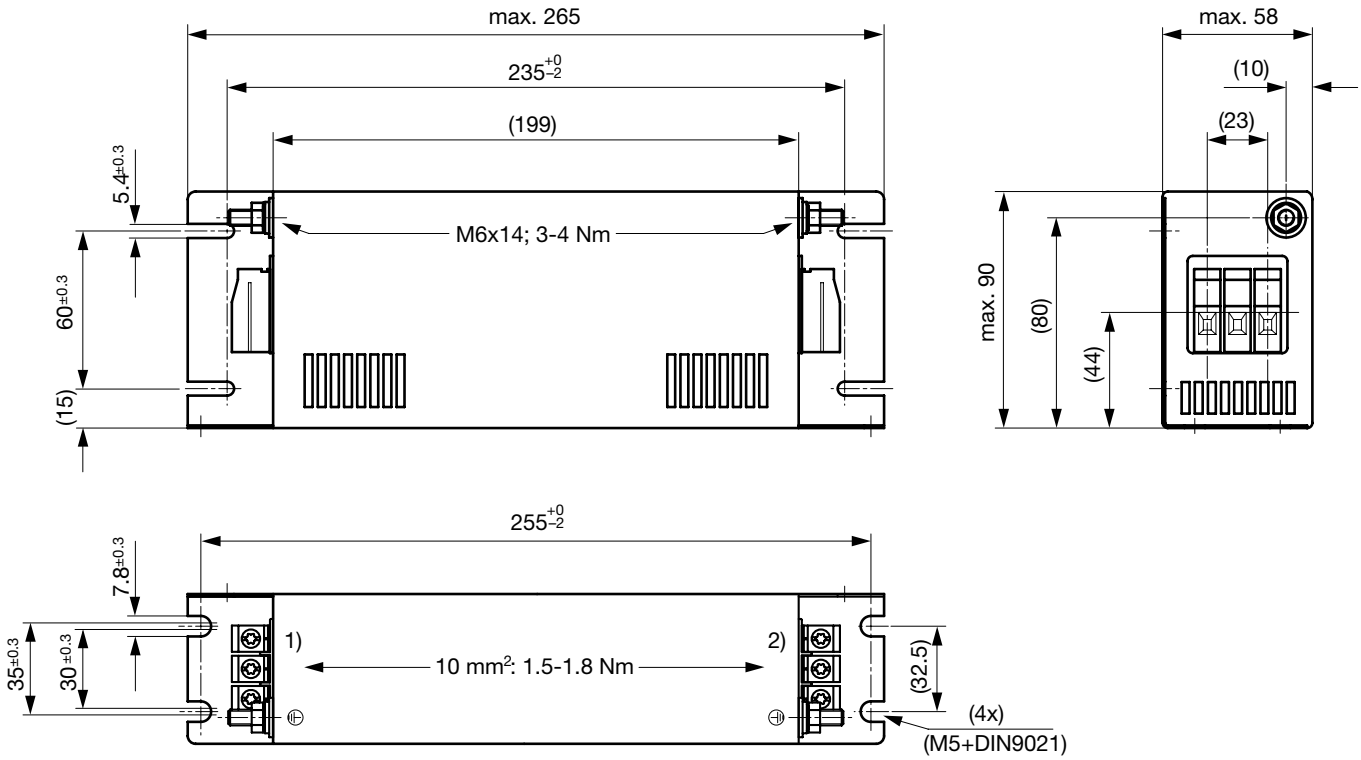

1) Line
2) Load

Case 1E

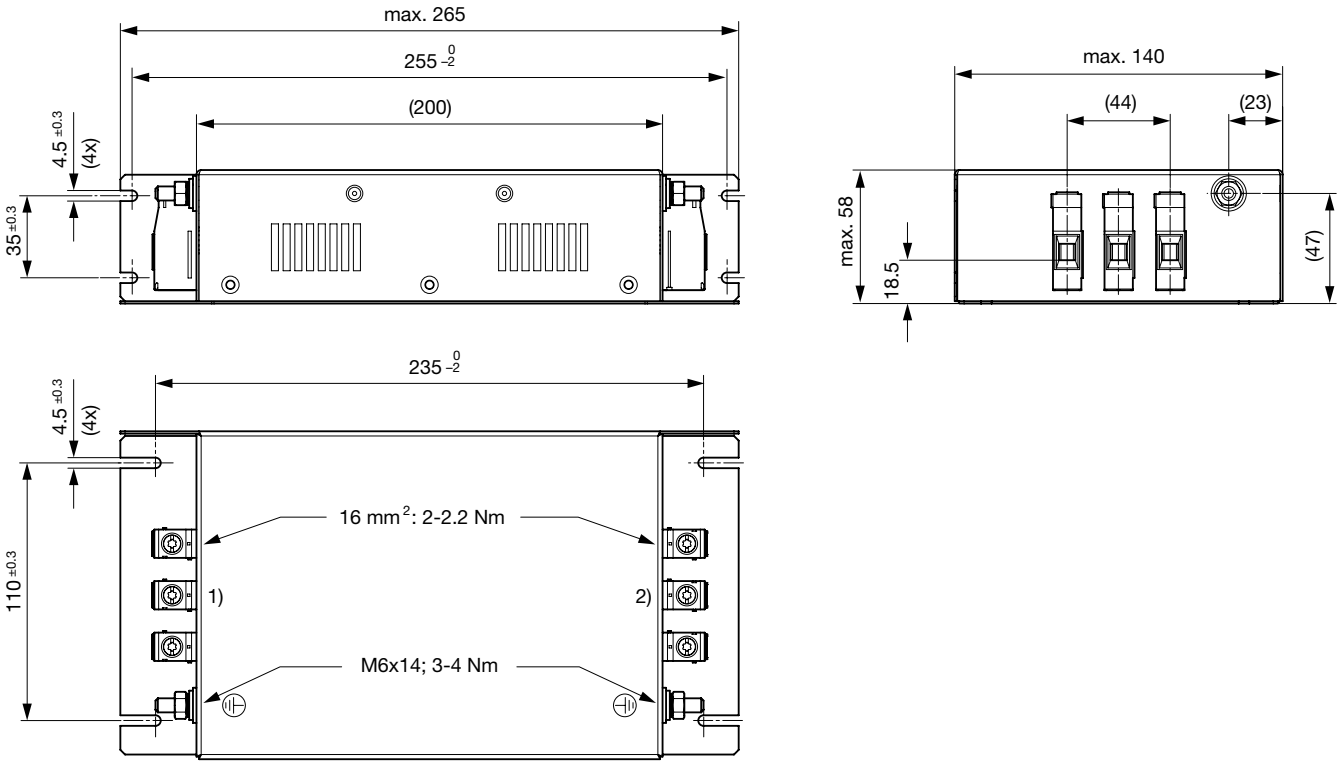

1) Line
2) Load

Case 1T

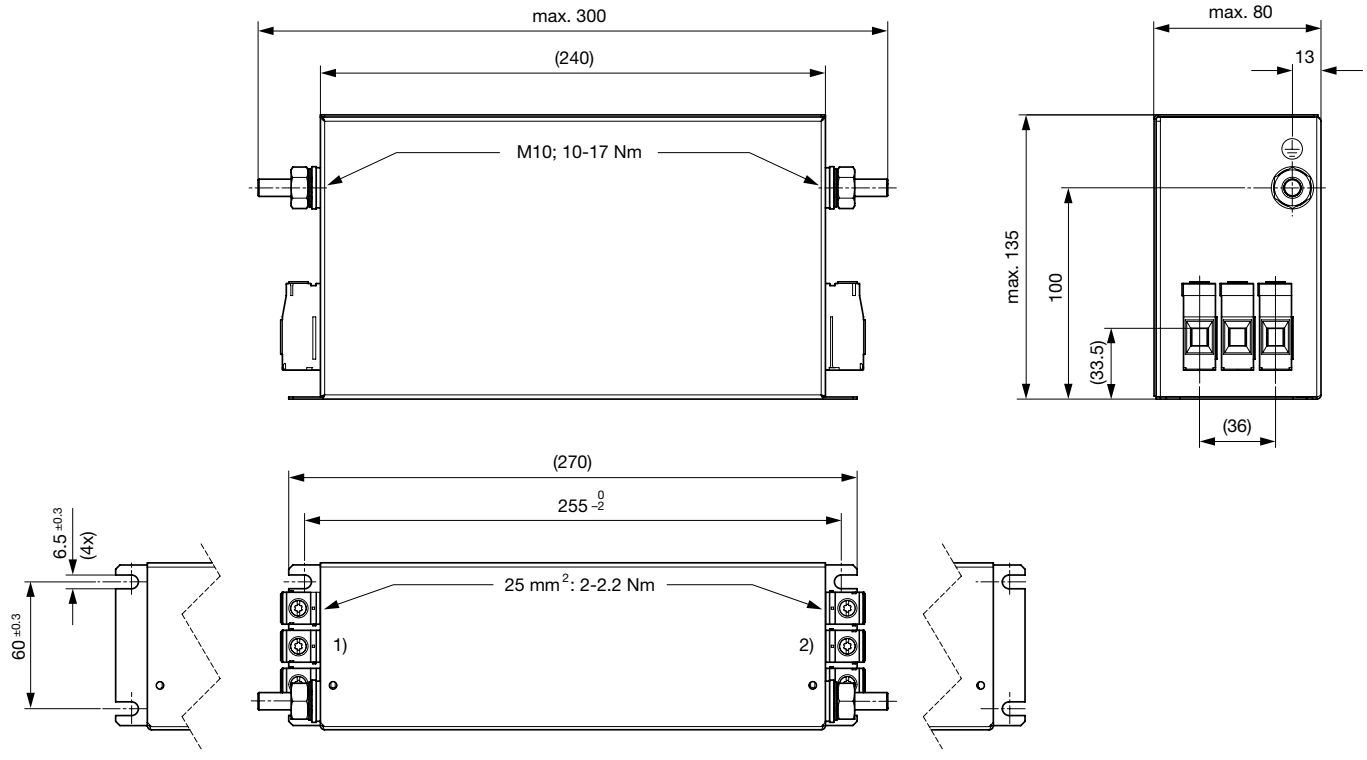

1) Line
2) Load

Case 1G

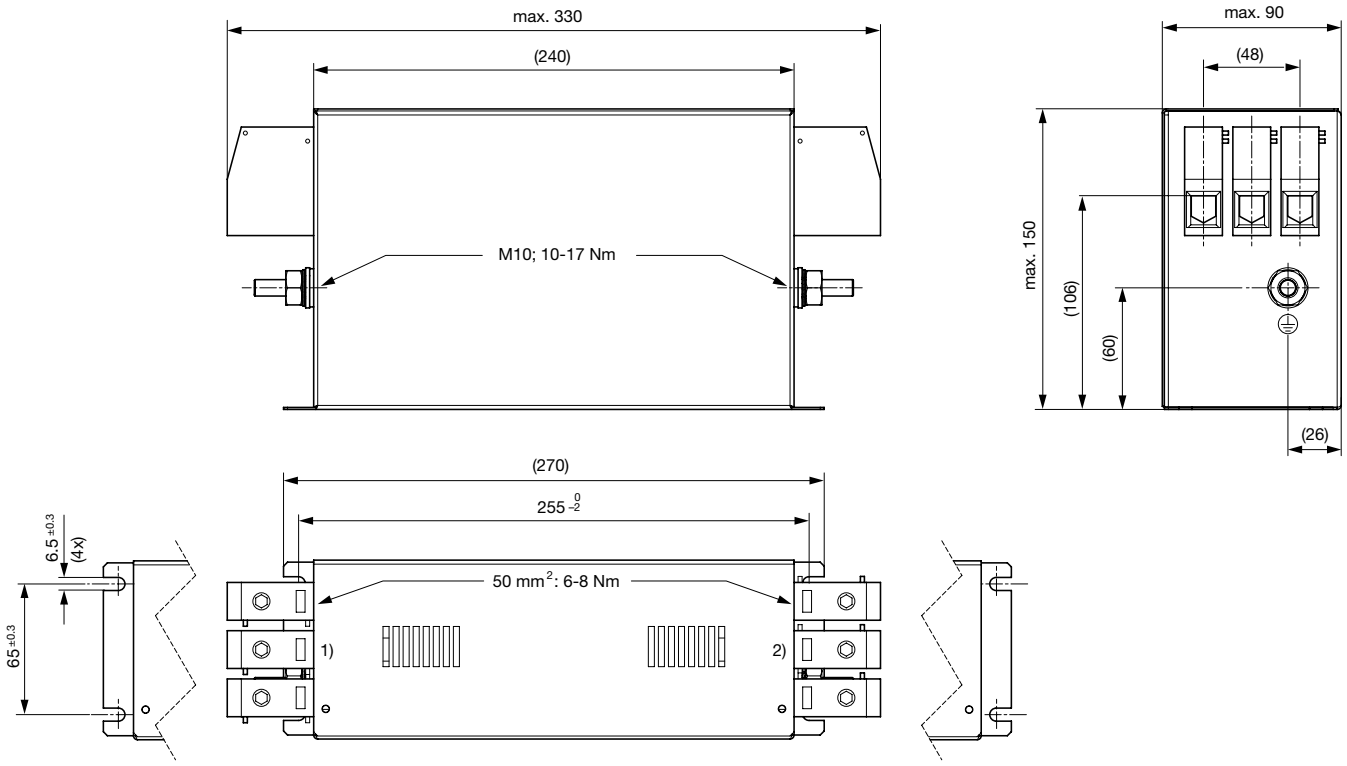

1) Line
2) Load

Diagrams

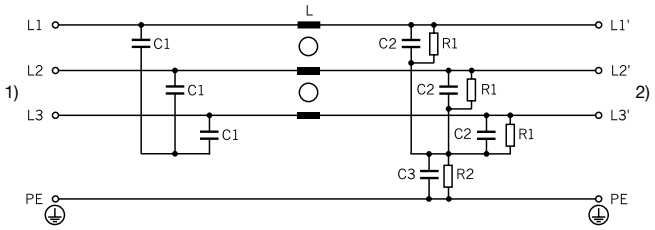

1) Line
2) Load

Attenuation Loss

- - - - differential mode _____ common mode

Industrial version

16A (FMAC-091C-1610)

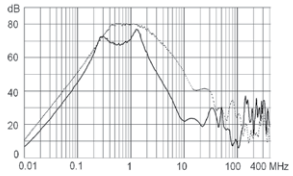

25A (FMAC-091C-2510)

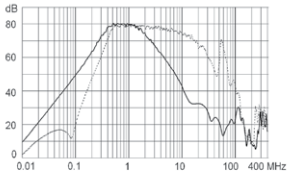

36A (FMAC-091D-3610)

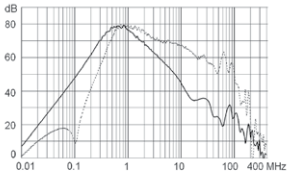

50A (FMAC-091D-5010)

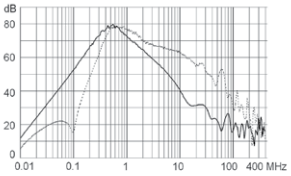

55A (FMAC-091D-5510)

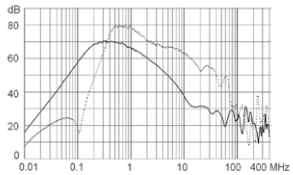

64A (FMAC-091E-6410)

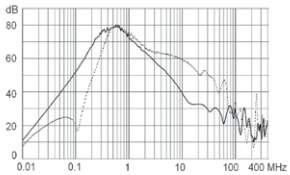

80A (FMAC-091T-8010)

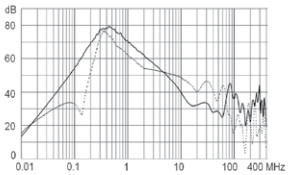

110A (FMAC-091G-H110)

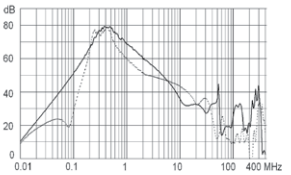

150A (FMAC-091G-H210)

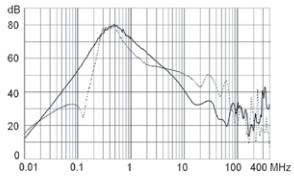

All Variants [nicht konfiguriert] - element_name:EMV_Variantentabelle_FMAC_EMV03: id:48589

Rated	Cha-	Rated	Tripped	Lea-	Contact	Weight	Screw	Housing	Order

Most Popular.

Availability for all products can be searched real-time:http://www.schurter.com/en/Stock-Check/Stock-Check-SCHURTER

1) Nominal leakage current acc. to IEC60950 - 5.2.5. under normal operating conditions. Note: worst case leakage current acc. to IEC60950 - Annex G4 (situation with two interrupted lines) can be much higher.

2) Maximum conductor cross section (wire gauge) to be used; a comparative table for AWG and mm² values can be found in the general product information www.schurter.com/emc_info

Packaging unit 1 Pcs

21.05.2015

The specifications, descriptions and illustrations indicated in this document are based on current information. All content is subject to modifications and amendments. Information furnished is believed to be accurate and reliable. However, users should independently evaluate the suitability and test each product selected for their own applications.