20808-087 STATIC HANDLE PLASTIC IN TRAPEZOID FORM, BLACK, 14 HP



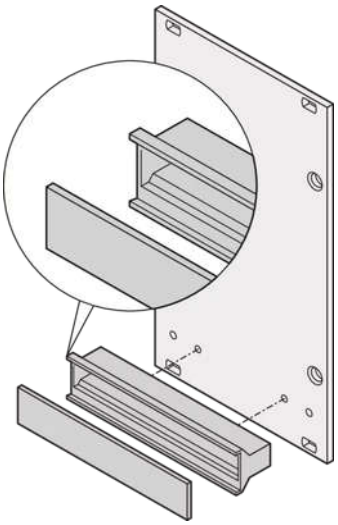

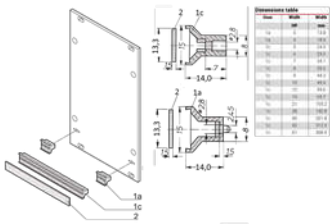

KEY FEATURES

With separate identification plate, Al 1.5 mm

Handle, PC, UL 94 V-0

PRODUCT ATTRIBUTES

Product Type: Handle

Type: Static

Works With: Front Panels

Handle Type: Trapezoid, Static

Rack Width: 14 HP

Width: 69.7 mm

Material: Polycarbonate

Color: Black

Flammability Rating: UL® 94V-0

Complies With: EN 45545-2, R22-R24, HL3; IEC 60297-3-101

Package Quantity: 5

ADDITIONAL PRODUCT DETAILS

The static plastic handle, trapezoid form in black color can be mounted to a front panel for extraction of the PCB.

Please take into consideration that deliveries may be carried out in the stated SPQs (SPQ, e.g. 5 pieces, 10 pieces, 50 pieces, etc.). Differing order quantities (e.g. 2 pieces) may be changed to the next possible delivery quantity = Standard Pack Quantity.

Cannot be used together with fixing clip (21101-239).

CERTIFICATIONS

RoHS COMPLIANT

North America
All locations
+1.763.422.2661
Chat with us:
schroff.nvent.com

Europe
Straubenhardt, Germany
+49.7082.794.0
Betschdorf, France
+33.3.88.90.64.90
Warsaw, Poland
+48.22.209.98.35
Assago, Italy
+39.02.932.7141
Chat with us:
schroff.nvent.com

Asia
Shanghai, China
+86.21.2412.6943
Qingdao, China
+86.532.8771.6101
Singapore
+65.6768.5800
Shin-Yokohama, Japan
+81.45.476.0271
Chat with us:
schroff.nvent.com

Middle East & India
Dubai, United Arab Emirates
+971.4.378.1700
Bangalore, India
+91.80.6715.2001
Istanbul, Turkey
+90.216.250.7374
Chat with us:
schroff.nvent.com

nVent

Our powerful portfolio of brands:
nVent.com CADDY ERICO HOFFMAN RAYCHEM SCHROFF TRACER

© 2023 nVent. All nVent marks and logos are owned or licensed by nVent Services GmbH or its affiliates. All other trademarks are the property of their respective owners.

nVent reserves the right to change specifications without notice.