Product Details

Part No	CPCXXVV10UN
Description	A2P Fan Controller

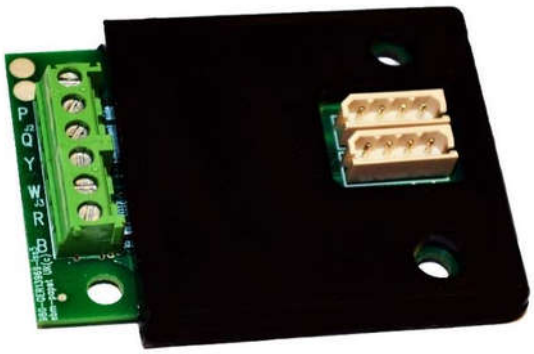

Issue	Date	Author	Comments
2	30/09/2019	F.Pagliarini	Second Release

Safety Notice

⚠ **CAUTION – Safety**

- The controller is only suitable for a low voltage (10V to 57V DC) supply
- Electrical installations should only be carried out by qualified personnel
-

⚠ **CAUTION – Electro-Static Discharge**

Many modern electronic components are susceptible to damage from Electro-Static Discharge (Static Electricity). During commissioning and/or programming, avoid unnecessary contact with electronic components on PCB's. PCB's which are sensitive to static discharges should be stored and transported in anti-static packaging until they are required to be used.

⚠ **Warning – Do not operate in an explosive atmosphere**

⚠ **Warning – Fan may start during connection and programming. Secure fan safely before applying power**

Part Number	CPCXXVV10UN
Supply Voltage	10V to 57V DC
Supply Current	Up to 1 mA (@10VDC), Up to 4.5mA (@57VDC)
Control Output	Open collector PWM at 8KHz
Control Input	0-10V DC (maximum 100kΩ load)
Maximum Number of Fans	*100 x DC Fans (12-48Vdc supply)
Operating Temperature	-30°C to +60°C

*multiple DC fans are not recommended due to the potential negative effect on the speed control in case of fan failure(s)

(c) ebm-papst UK Ltd 2018
Chelmsford Business Park Chelmsford Essex CM2 5EZ
Telephone: +44(0)1245468555 Fax: +44(0)1245466336
e-mail sales@uk.ebmpapst.com

Control Profile

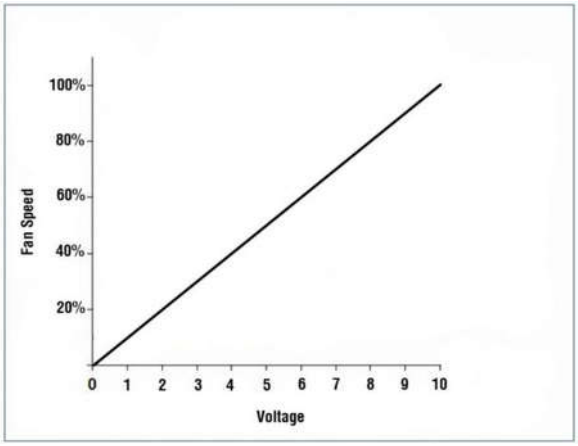

Connections

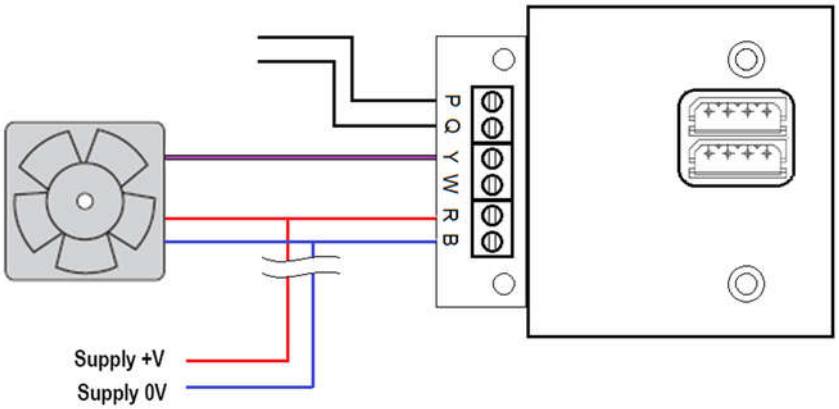

Terminal	CPCXXVV10MC
P	0-10V DC (maximum 100kΩ load)
Q	GND (0V)
Y	Open-Collector PWM Output at 8Khz
W	NC
R	10V to 57V DC supply
B	GND(0V)

Transport and Storage

- PCBs should be transported in anti-static build-up bag or static dissipative bags.
- Store in a dry environment
- Storage temperature: -30°C to +70°C.

Maintenance and Servicing

There are no user serviceable parts.

(c) ebm-papst UK Ltd 2018
Chelmsford Business Park Chelmsford Essex CM2 5EZ
Telephone: +44(0)1245468555 Fax: +44(0)1245466336
e-mail sales@uk.ebmpapst.com