DATA SHEET

Supplied with CALIBRATION certificate



MP 110 - MP 111
MP 115 - MP 112

Manometer

- **Easy to use**
- **Selection of units**
- **Hold-min-max functions**
- **Manual autozero**

Features

- Pressure measurement
- Selection of units
- Manual autozero
- Hold function
- Display of minimum and maximum values
- Configurable Auto shut-off
- Backlight

Technical specifications

Parameter	Models	Measuring units	Accuracy*	Measuring range	Resolution
Pressure	MP 110	Pa, mmH_2O, inWg, daPa	±0.5% of reading ±2 Pa	From -1000 to +1000 Pa	1 Pa
	MP 111	kPa, mmH_2O, inWg, mbar, mmHg, daPa	±0.5% of reading ±2 mmH_2O	From -1000 to +1000 mmH_2O	From 0 to ±200 mmH_2O: 0.1 mmH_2O Beyond: 1 mmH_2O
	MP 115	kPa, inWg, mbar, mmHg, PSI	±0.5% of reading ±0.5 mbar	From -500 to +500 mbar	0.1 mbar
	MP 112	kPa, inWg, mbar, mmHg, PSI, bar	±0.5% of reading ±2 mbar	From -2000 to +2000 mbar	1 mbar

*All the accuracies indicated in this technical datasheet were stated in laboratory conditions, and can be guaranteed for measurements carried out in the same conditions, or carried out with calibration compensation.

General features

Measuring element	Piezoresistive sensor
Tolerated overpressure	MP 110: 250 mbar / MP 111: 700 mbar MP 115: 1.4 bar / MP 112: 3 bar
Connector	MP 110 / 111: Ø 6.2 mm barbed connectors made of nickelled brass MP 115 / 112: Ø 4.6 mm barbed connectors made of nickelled brass
Display	4 lines, LCD technology. Dimensions 50 x 36 mm. 2 lines of 5 digits with 7 segments (value) 2 lines of 5 digits with 16 segments (unit)
Housing	ABS, protection IP54
Keypad	5 keys
European directives	2014/30/EU EMC; 2014/35/EU Low Voltage; 2011/65/EU RoHS II; 2012/19/EU WEEE
Power supply	4 batteries AAA LR03 1.5 V
Battery life	180 hours
Ambience	Neutral gas
Conditions of use (°C, %RH, m)	From 0 to +50 °C. In non condensing conditions. From 0 to 2000 m.
Storage temperature	From -20 to +80 °C
Auto shut-off	Adjustable from 0 to 120 min
Weight	220 g

Operating principle

Piezoresistive sensor

The pressure deforms the silicon layer. This layer deformation generates a voltage at its terminates.
This voltage is proportional to the pressure applied.

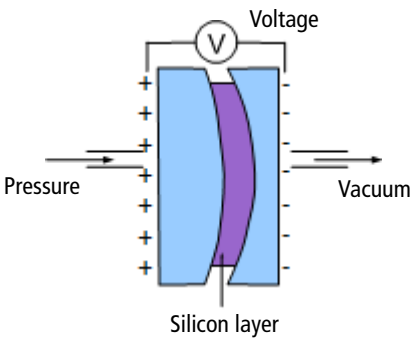

Dimensions (in mm)

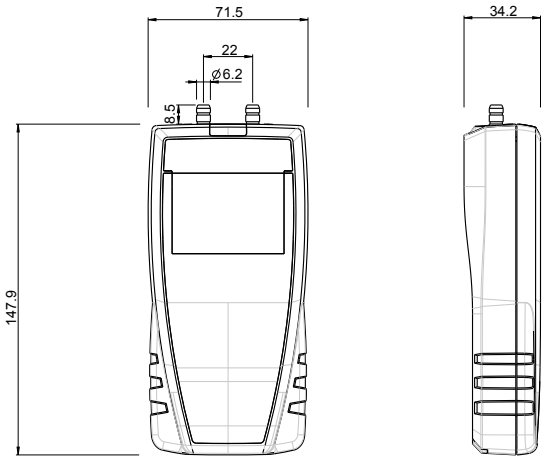

Kit content

All the instruments are supplied with:
- Calibration certificate*
- Transport case (ref.: ST 110)

The MP 110 and MP 111 instruments are supplied with:
- 2 x 1 m of silicon tube Ø 4 x 7 mm
- Stainless steel tip Ø 6 x 100 mm

The MP 115 and MP 112 instruments are supplied with:
- 2 x 1 m of crystal tube Ø 4 x 6 mm

Accessories

Name	Reference
Magnetic protective housing	CQ 15
Straight junctions, in T or Y for Ø 5 x 8 mm tube	JTC or JTY
Pitot tubes Different lengths, Ø 3/6 or 8 mm, bent or straight	See dedicated data sheet
ABS transport case	MT 51

Maintenance

We carry out calibration, adjustment and maintenance of your instruments to guarantee a constant level of quality of your measurements.

As part of Quality Assurance Standards, we recommend you to carry out a yearly checking.

Warranty

Instruments have 1-year guarantee for any manufacturing defect (return to our After-Sales Service required for appraisal).

FT_EN – MP120 – 11/08/16 – Non-contractual document – We reserve the right to modify the characteristics of our products without prior notice.