O1D101

Photoelectric distance sensor

O1DLFPKG/IO-LINK

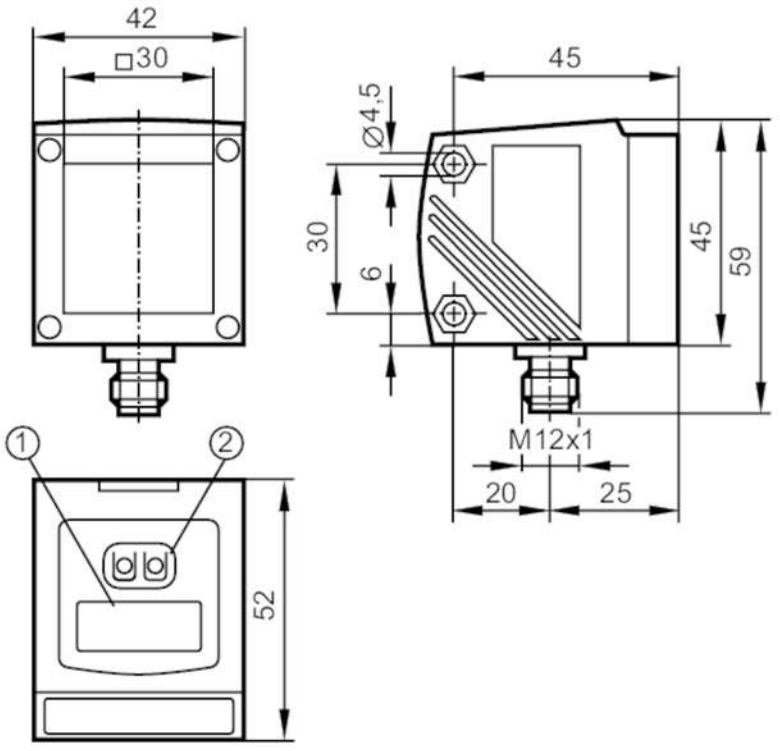

1 alphanumeric display 4-digit
2 programming buttons

Product characteristics		
Laser protection class		2
Electrical data		
Operating voltage	[V]	10...30 DC
Current consumption	[mA]	< 150
Protection class		III
Reverse polarity protection		yes
Typ. lifetime	[h]	50000
Inputs / outputs		
Number of inputs and outputs		Number of digital outputs: 1
Outputs		
Total number of outputs		1
Electrical design		PNP
Number of digital outputs		1
Output function		normally open / normally closed; (programmable)
Max. current load per output	[mA]	200
Type of short-circuit protection		pulsed
Overload protection		yes

O1D101

Photoelectric distance sensor

O1DLFPKG/IO-LINK

Detection zone			
Max. light spot width	[mm]	15	
Max. light spot height	[mm]	15	
Light spot dimensions refer to		10 m	
Background suppression	[m]	10...100	
Measuring/setting range			
Measuring range	[m]	0.2...10; (white paper 200 x 200 mm 90% remission)	
Sampling rate	[Hz]	5	
Interfaces			
Communication interface		IO-Link	
Transmission type		COM2 (38,4 kBaud)	
IO-Link revision		1.1	
SDCI standard		IEC 61131-9	
Profiles		Smart Sensor: Sensor Identification; Binary Data Channel; Process Value; Sensor Diagnosis	
SIO mode		yes	
Required master port type		A	
Process data analogue		2	
Process data binary		1	
Min. process cycle time	[ms]	6	
Supported DeviceIDs		Type of operation	DeviceID
		Default	807
Operating conditions			
Ambient temperature	[°C]	-10...60	
Protection		IP 67	
Tests / approvals			
Laser protection class		2	
Notes on laser protection		Caution:	laser light
		Power:	<= 4,0 mW
		Wave length:	650 nm
		pulse:	1,3 ns
		Do not stare into beam.	
		Avoid exposure to the laser light.	
		laser class:	2
			EN / IEC60825-1:2007
			EN / IEC60825-1:2014
			Complies with 21 CFR 1040 except for deviations pursuant to Laser Notice No. 50, dated June 2007.
MTTF	[years]	106	
Mechanical data			
Weight	[g]	268.5	
Dimensions	[mm]	59 x 42 x 52	
Materials		housing: diecast zinc; front pane: glass; LED window: PC	

O1D101

Photoelectric distance sensor

O1DLFPKG/IO-LINK

Displays / operating elements		
Display	switching status	LED, yellow
	operation	LED, green
	distance value, programming	alphanumeric display, 4-digit

Accessories	
Accessories (optional)	Protective cover, E21133

Remarks	
Remarks	operating voltage "supply class 2" according to cULus
Pack quantity	1 pcs.

Electrical connection

Connector: 1 x M12; coding: A

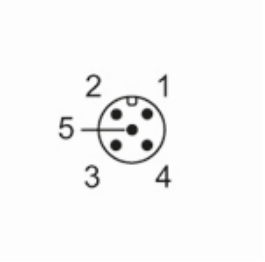

Connection

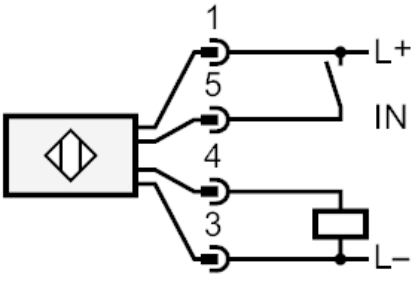

4	OUT1 switching output or IO-Link
5	Laser On/ Off

O1D101

Photoelectric distance sensor

O1DLFPKG/IO-LINK

Other data

repeatability/accuracy

	repeatability of the measured values		accuracy	
	white (90 % remission)	grey (18 % remission)	white (90 % remission)	grey (18 % remission)
200...1000 mm	± 4.5 mm	± 6.0 mm	± 15.0 mm	± 16.0 mm
1000...2000 mm	± 5.0 mm	±8.0 mm	± 15.0 mm	± 18.0 mm
2000...4000 mm	± 16.0 mm	±19.0 mm	± 25.0 mm	± 30.0 mm
4000...6000 mm	± 24.0 mm	± 33.0 mm	± 35.0 mm	± 45.0 mm
6000...10000 mm	± 50.0 mm	-	± 65.0 mm	-
Extraneous light on the object		< 40 klx		

repeatability/accuracy

	repeatability of the measured values		accuracy	
	white (90 % remission)	grey (18 % remission)	white (90 % remission)	grey (18 % remission)
200...2000 mm	± 14.0 mm	± 14.0 mm	± 24.0 mm	± 24.0 mm
2000...4000 mm	± 25.0 mm	± 30.0 mm	± 35.0 mm	± 40 mm
4000...6000 mm	± 31.0 mm	±45.0 mm	± 41.0 mm	± 55.0 mm
6000...10000 mm	± 60.0 mm	-	± 70.0 mm	-
Extraneous light on the object		< 40...100 klx		
Range on black object (6 % remission)		<= 4000 klx		
The values apply at				
constant ambient conditions		23 °C / 960 hPa		
minimum power-on time in minutes		10		