PN7699

Pressure sensor with display

PN-1-1BREN14-QFRKG/US/ /V

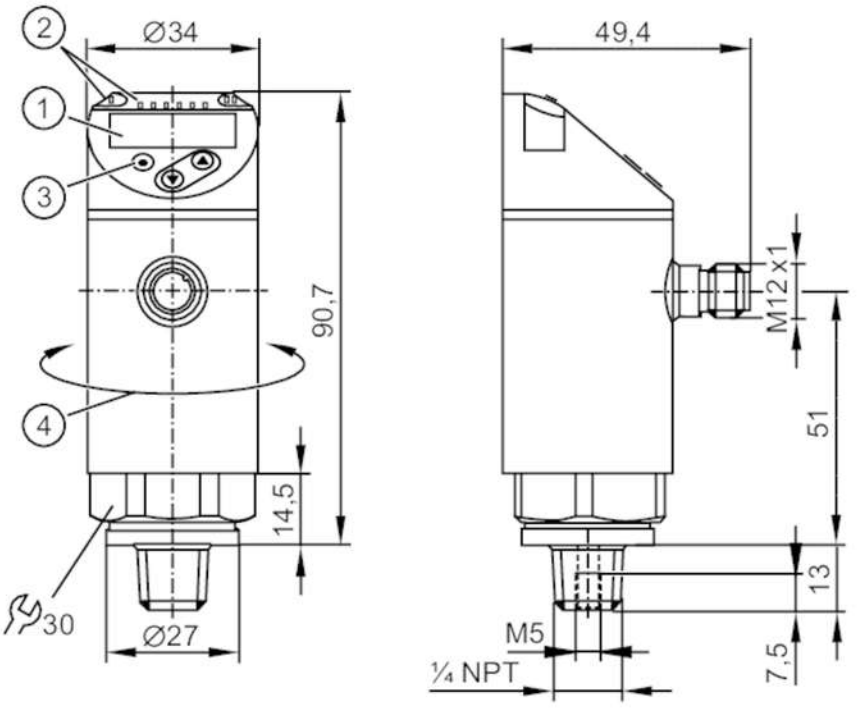

1 alphanumeric display 4-digit red/green
2 LEDs Display unit / switching status
3 programming button
4 upper part of the housing can be rotated 345°

Product characteristics					
Number of inputs and outputs	Number of digital outputs: 2				
Measuring range	-1...1 bar	-1000...1000 mbar	-14.5...14.5 psi	-29.4...29.4 inHg	-100...100 kPa
Process connection	threaded connection 1/4" NPT external thread				
Application					
Special feature	Gold-plated contacts				
Measuring element	ceramic-capacitive pressure measuring cell				
Application	for industrial applications				
Media	liquids and gases				
Medium temperature [°C]	-25...80				
Min. bursting pressure	30000 mbar	450 psi	880 inHg	3000 kPa	
Pressure rating	10000 mbar	145 psi	290 inHg	1000 kPa	
Type of pressure	relative pressure; vacuum				
MAWP (for applications according to CRN)	20 bar	20000 mbar	290 psi	590 inHg	2000 kPa
Electrical data					
Operating voltage [V]	18...30 DC; (to SELV/PELV)				
Current consumption [mA]	< 35				
Min. insulation resistance [MΩ]	100; (500 V DC)				
Protection class	III				

PN7699

Pressure sensor with display

PN-1-1BREN14-QFRKG/US/ /V

Reverse polarity protection		yes
Power-on delay time	[s]	< 0.3
Integrated watchdog		yes
Inputs / outputs		
Number of inputs and outputs		Number of digital outputs: 2
Outputs		
Total number of outputs		2
Output signal		switching signal; IO-Link; (configurable)
Electrical design		PNP/NPN
Number of digital outputs		2
Output function		normally open / normally closed; (parameterisable)
Max. voltage drop switching output DC	[V]	2.5
Permanent current rating of switching output DC	[mA]	150; (200 (...60 °C) 250 (...40 °C))
Switching frequency DC	[Hz]	< 170
Short-circuit protection		yes
Type of short-circuit protection		pulsed
Overload protection		yes

Measuring/setting range					
Measuring range	-1...1 bar	-1000...1000 mbar	-14.5...14.5 psi	-29.4...29.4 inHg	-100...100 kPa
Factory setting / CMPT = 2					
Set point SP	-980...1000 mbar	-14.3...14.5 psi	-29...29.6 inHg	-98...100 kPa	
Reset point rP	-990...990 mbar	-14.4...14.4 psi	-29.4...29.2 inHg	-99...99 kPa	
Min. difference between SP and rP	10 mbar	0.2 psi	0.4 inHg	1 kPa	
In steps of	10 mbar	0.1 psi	0.2 inHg	1 kPa	
Status_B High Resolution / CMPT = 3					
Set point SP	-983...1000 mbar	-14.3...14.5 psi	-29...29.5 inHg	-98...100 kPa	
Reset point rP	-993...990 mbar	-14.4...14.4 psi	-29.3...29.2 inHg	-99...99 kPa	
Min. difference between SP and rP	10 mbar	0.2 psi	0.3 inHg	1 kPa	
In steps of	1 mbar	0.1 psi	0.1 inHg	1 kPa	

Accuracy / deviations		
Switch point accuracy	[% of the span]	< ± 0,5
Repeatability	[% of the span]	< ± 0,1; (with temperature fluctuations < 10 K)
Characteristics deviation	[% of the span]	< ± 0,25 (BFSL) / < ± 0,5 (LS); (BFSL = Best Fit Straight Line; LS = limit value setting)
Hysteresis deviation	[% of the span]	< ± 0,25
Long-term stability	[% of the span]	< ± 0,05; (per 6 months)
Temperature coefficient zero point		< ± 0,2; (-0...80 °C)

PN7699

Pressure sensor with display

PN-1-1BREN14-QFRKG/US/ /V

	[% of the span / 10 K]		
Temperature coefficient span	[% of the span / 10 K]	< ± 0,2; (-0...80 °C)	
Response times			
Response time	[ms]	< 3	
Delay time programmable dS, dr	[s]	0...50	
Software / programming			
Parameter setting options		hysteresis / window; normally open / normally closed; switching logic; switch-on/switch-off delay; Damping; Display unit	
Interfaces			
Communication interface		IO-Link	
Transmission type		COM2 (38,4 kBaud)	
IO-Link revision		1.1	
SDCI standard		IEC 61131-9	
SIO mode		yes	
Required master port type		A; (when pin 2 not connected: B)	
Supported DeviceIDs		**Type of operation**	**DeviceID**
		Default	406
		Factory setting / CMPT = 2	627
		Status_B High Resolution / CMPT = 3	636
Note		For further information please see the IODD PDF file under "Downloads"	
Factory setting / CMPT = 2			
Profiles		Smart Sensor: Process Data Variable; Device Identification, Device Diagnosis	
Min. process cycle time	[ms]	2.3	
IO-Link resolution pressure		1 mbar	0.001 MPa
IO-Link process data (cyclical)		**function**	**bit length**
		pressure	14
		binary switching information	2
IO-Link functions (acyclical)		application specific tag	
Status_B High Resolution / CMPT = 3			
Profiles		Smart Sensor ED2: Digital Measuring Sensor (0x000A), Identification and Diagnosis (0x4000)	
Min. process cycle time	[ms]	3	
IO-Link resolution pressure		1 mbar	0.001 MPa
IO-Link process data (cyclical)		**function**	**bit length**
		pressure	16
		device status	4
		binary switching information	2
IO-Link functions (acyclical)		application specific tag	
Operating conditions			
Ambient temperature	[°C]	-25...80	
Storage temperature	[°C]	-40...100	
Protection		IP 65; IP 67	

PN7699

Pressure sensor with display

PN-1-1BREN14-QFRKG/US/ /V

Tests / approvals			
EMC		DIN EN 61000-6-2	
		DIN EN 61000-6-3	
Shock resistance		DIN EN 60068-2-27	50 g (11 ms)
Vibration resistance		DIN EN 60068-2-6	20 g (10...2000 Hz)
MTTF	[years]	260	
UL approval		UL Approval no.	J001
Pressure Equipment Directive		Sound engineering practice; can be used for group 2 fluids; group 1 fluids on request	

Mechanical data		
Weight	[g]	243.5
Housing		cylindrical
Dimensions	[mm]	Ø 34 / L = 90.7
Materials		stainless steel (316L/1.4404); PBT+PC-GF30; PBT-GF20; PC
Materials (wetted parts)		stainless steel (316L/1.4404); ceramics; FKM
Min. pressure cycles		100 million
Tightening torque	[Nm]	2...3 turns after hand-fastening; recommended tightening torque; depends on lubrication, seal and pressure rating
Process connection		threaded connection 1/4" NPT external thread
Restrictor element integrated		no (can be retrofitted)

Displays / operating elements		
Display	Display unit	4 x LED, green (bar, psi, kPa, inHg)
	switching status	2 x LED, yellow
	measured values	alphanumeric display, red/green 4-digit

Remarks	
Pack quantity	1 pcs.

Electrical connection

Connector: 1 x M12; coding: A; Contacts: gold-plated



PN7699

Pressure sensor with display

PN-1-1BREN14-QFRKG/US/ /V

Connection

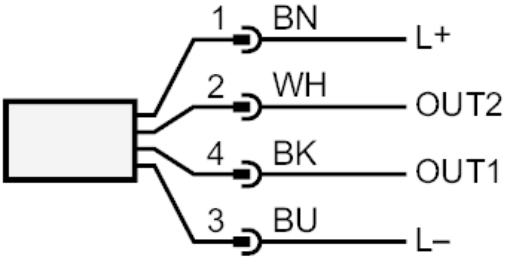

OUT1	switching output IO-Link
OUT2	switching output
	colours to DIN EN 60947-5-2
	Core colours :
BK =	black
BN =	brown
BU =	blue
WH =	white