

P.C.B. LAYOUT

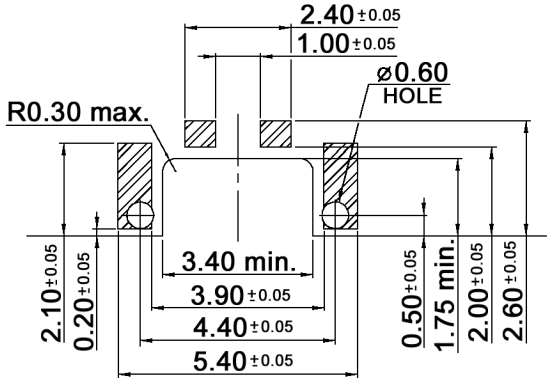

CIRCUIT DIAGRAM

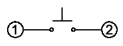

Compliance: RohS II (2011/65/EU)

Tolerances: ±0.2mm			Date	Name
			11/15	dr
Modifications	Date	Name		

TSS 3222 xP RA

knitter-switch

30 34 83

Page 1/2

Specifications:

Contact rating:	50mA, 12V DC
Contact resistance:	500mOhm max.
Insulation resistance:	100MOhm min. at 100V DC
Dielectric strength:	100V AC (50/60Hz) for 1 minute
Operating temperature:	-30°C to +85°C
Storage temperature:	-40°C to +90°C
Mechanical life:	600 000 cycles
Travel:	0.15 +/-0.1mm
Material:	Contact: stainless steel, silver cladding
	Stem: high-temp. thermoplastic LCP
	Tape: kapton
	Terminal: phosphor bronze, silver plated
	Base: high-temp. thermoplastic PA9T, molded black
	Cover: stainless steel, gold flash

Soldering conditions:

IR-reflow soldering

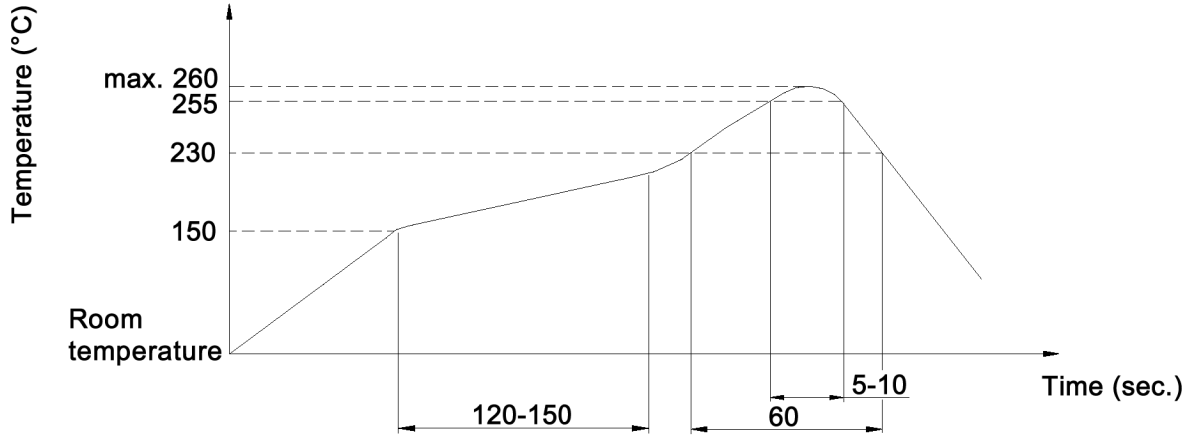

x	Operating force
N	160 +/-50gf
R	220 +/-50gf

Compliance: RohS II (2011/65/EU)

Tolerances: ±0.2mm			Date	Name	TSS 3222 xP RA
			11/15	dr	
			knitter-switch	30 34 83	Page 2/2
Modifications	Date	Name			