EBF012

Y-splitter

ZDO2F030VAS0000-00STGH040VAS

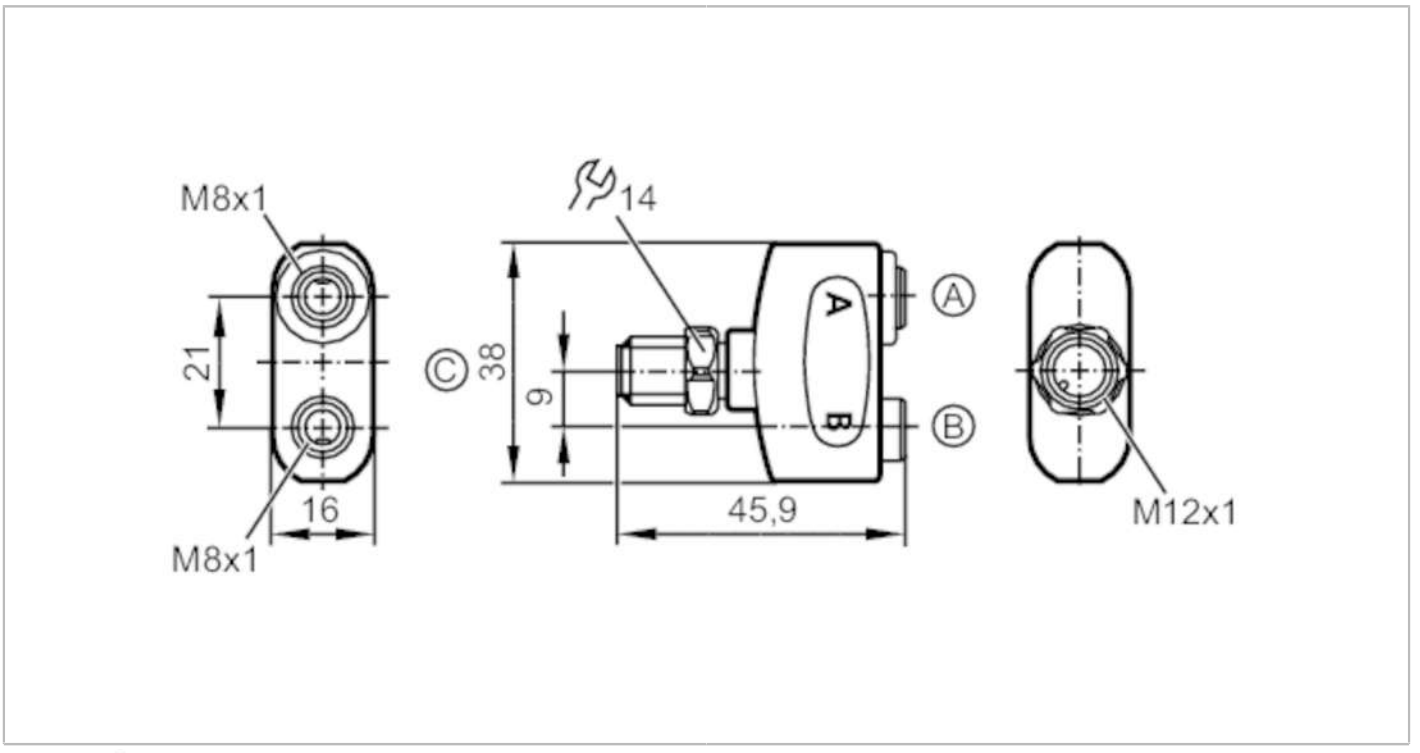

Application			
Special feature			Free from silicone; Gold-plated contacts
Free from silicone			yes
Electrical data			
Operating voltage	[V]		< 50 AC / < 60 DC; (cULus: 30 AC / 42 DC)
Protection class			III
Max. current load total	[A]		3
Operating conditions			
Ambient temperature	[°C]		-25...80
Note on ambient temperature			cULus: ...65 °C
Protection			IP 65; IP 67; IP 68; IP 69K
Tests / approvals			
UL approval		power supply	Class 2
		File number UL	E191684
Mechanical data			
Weight	[g]		28.7
Materials			housing: PA grey; Halogen-free; Sealing: EPDM
Material nut			stainless steel (1.4404 / 316L)
Remarks			
Pack quantity			1 pcs.

EBF012

Y-splitter

ZDO2F030VAS0000-00STGH040VAS

Electrical connection

, PUR; flame-retardant (IEC 60332-2, UL: FT2)

Electrical connection - plug

Connector: 1 x M12; coding: A; Locking: stainless steel (1.4404 / 316L); Contacts: gold-plated; Tightening torque: 0.6...1.5 Nm; Take into account the maximum value of the counterpart!



Electrical connection

Connection

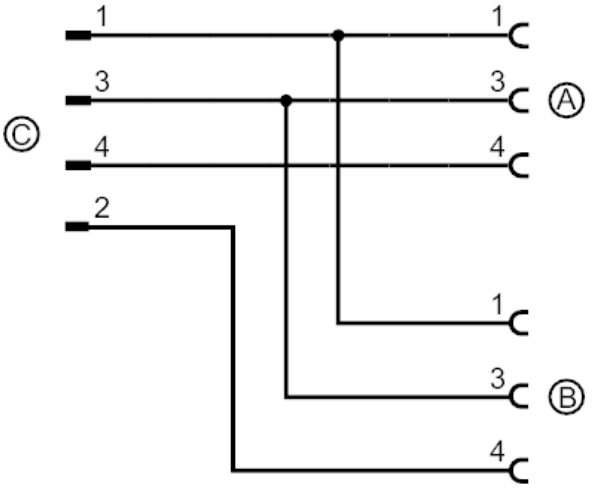

Electrical connection - socket

Connector: 2 x M8; coding: A; Locking: stainless steel (1.4404 / 316L); Contacts: gold-plated; Tightening torque: 0.3...0.5 Nm

