KG5311

Capacitive sensor

KG-3080QBPKG/SL/1P/US/IO

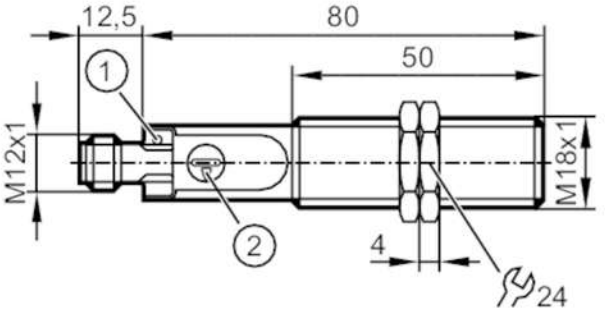

1 LED yellow switching status
2 potentiometer Sensing range

Made in Germany

Application		
Medium temperature	[°C]	-25...110
Electrical data		
Operating voltage	[V]	10...30 DC
Current consumption	[mA]	< 22
Protection class		III
Reverse polarity protection		yes
Outputs		
Output function		normally open
Max. voltage drop switching output DC	[V]	2.5
Permanent current rating of switching output DC	[mA]	200
Switching frequency DC	[Hz]	30
Electrical design		PNP
Short-circuit protection		yes
Overload protection		yes
Range		
Sensing range	[mm]	10
Real sensing range Sr	[mm]	10 ± 10 %
Accuracy / deviations		
Hysteresis	[% of Sr]	1...15
Switch point drift	[% of Sr]	-15...15

KG5311

Capacitive sensor

KG-3080QBPKG/SL/1P/US/IO

Interfaces			
Communication interface		IO-Link	
Transmission type		COM2 (38,4 kBaud)	
IO-Link revision		1.1	
SDCI standard		IEC 61131-9	
Profiles		Smart Sensor: Process Data Variable; Device Identification	
SIO mode		yes	
Required master port type		A	
Min. process cycle time	[ms]	20	
Operating conditions			
Ambient temperature	[°C]	-25...80	
Protection		IP 65; IP 67; IP 69K	
Tests / approvals			
EMC		EN 61000-4-2	8 kV AD / 4 kV CD
		EN 61000-4-3	10 V/m
		EN 61000-4-4	2 kV
		EN 61000-4-6	10 V
		EN 55011	class B
Vibration resistance		DIN EN 60947-5-2	1 mm amplitude, oscillation period 5 min., 30 min. per axis at resonance or 55 Hz
Shock resistance		DIN EN 60947-5-2	30 g 6 shocks / 11 ms half-sine (x, y, z)
MTTF	[years]	1204	
Mechanical data			
Weight	[g]	26	
Housing		threaded type	
Mounting		quasi flush	
Dimensions	[mm]	M18 x 1 / L = 92.5	
Thread designation		M18 x 1	
Materials		PBT; PC; POM	
Tightening torque	[Nm]	8	
Displays / operating elements			
Display		switching status	1 x LED, yellow
Accessories			
Accessories (supplied)		lock nuts: 2	
Remarks			
Pack quantity		1 pcs.	
Electrical connection			

Connector: 1 x M12

KG5311

Capacitive sensor

KG-3080QBPKG/SL/1P/US/IO



Connection

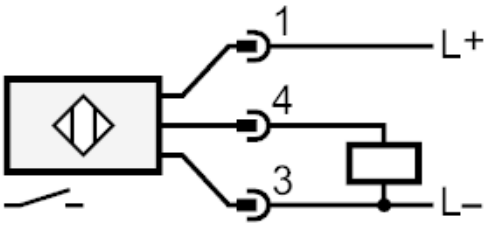

4: OUT / IO-Link