OPL203

Photoelectric angle sensor

OPL-FNKG/IO-LINK/AS

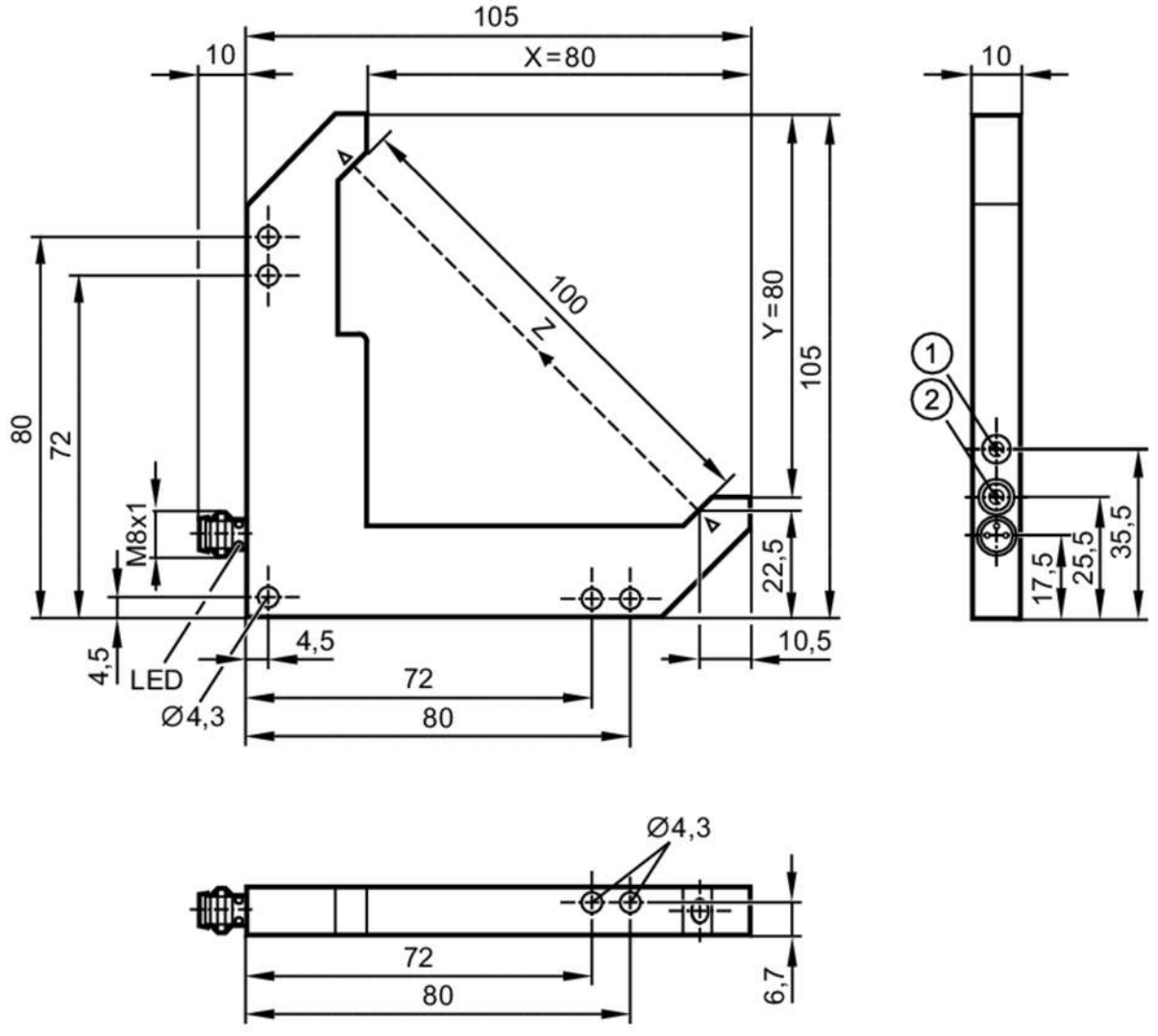

1 potentiometer sensitivity
2 output function switch

Product characteristics		
Type of light		red light
Electrical data		
Operating voltage	[V]	10...30 DC; ("supply class 2" to cULus)
Current consumption	[mA]	< 30
Protection class		III
Reverse polarity protection		yes
Type of light		red light
Wave length	[nm]	660
Outputs		
Electrical design		NPN
Output function		light-on/dark-on mode; (selectable)

OPL203

Photoelectric angle sensor

OPL-FNKG/IO-LINK/AS

Max. voltage drop switching output DC	[V]	1	
Permanent current rating of switching output DC	[mA]	100	
Switching frequency DC	[Hz]	5000	
Short-circuit protection		yes	
Type of short-circuit protection		pulsed	
Overload protection		yes	
Detection zone			
Diameter of the smallest detectable object	[mm]	0.3	
Interfaces			
Communication interface		IO-Link	
Transmission type		COM2 (38,4 kBaud)	
IO-Link revision		1.1	
SDCI standard		IEC 61131-9	
Profiles		Smart Sensor: Device Identification; Device Diagnosis; Teach Channel; Switching Channel; Process Data Variable	
SIO mode		yes	
Required master port type		A	
Min. process cycle time	[ms]	3.2	
Supported DeviceIDs		**Type of operation**	**DeviceID**
		default	1103
Operating conditions			
Ambient temperature	[°C]	-25...60	
Protection		IP 67	
Tests / approvals			
EMC		EN 60947-5-2	
MTTF	[years]	709	
Mechanical data			
Weight	[g]	182	
Dimensions	[mm]	105 x 10 x 105	
Side length X	[mm]	80	
Side length Y	[mm]	80	
Sensor width Z	[mm]	100	
Materials		housing: diecast zinc black anodised; lens: glass	
Displays / operating elements			
Display		switching status	1 x LED, yellow
Remarks			
Remarks		operating voltage "supply class 2" according to cULus	
Pack quantity		1 pcs.	

OPL203

Photoelectric angle sensor

OPL-FNKG/IO-LINK/AS

Electrical connection

Connector: 1 x M8; coding: A

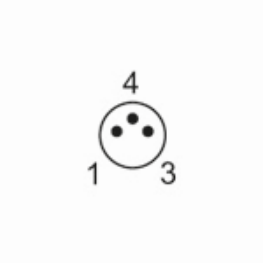

Connection

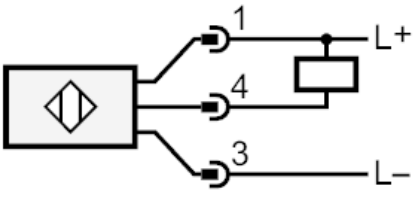

4	OUT / IO-Link