E89065

Mounting tube

LED-Tower/Pole/100mm

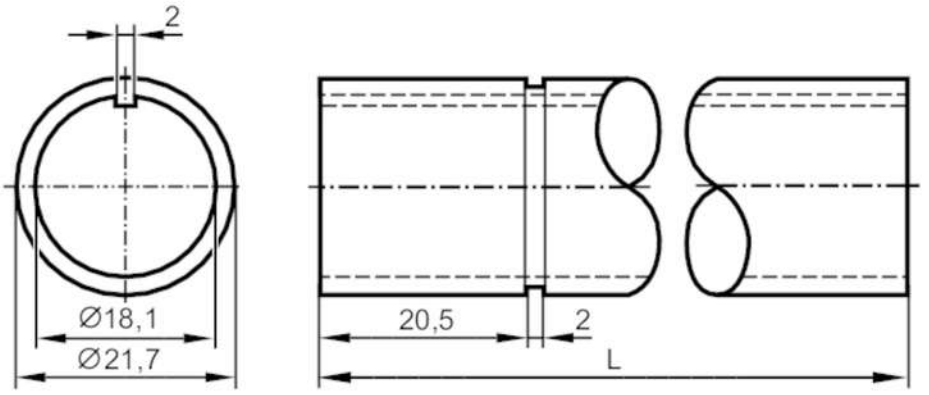

L: 100 mm

Mechanical data		
Weight	[g]	32
Dimensions	[mm]	Ø 21.7 / L = 100
Materials		aluminium black
Length L	[mm]	100

Accessories	
Accessories (optional)	mounting base:, E89060
	wall bracket:, E89061
	Mounting adapter:, E89063

Remarks	
Pack quantity	1 pcs.

Diagrams and graphs

base mounting

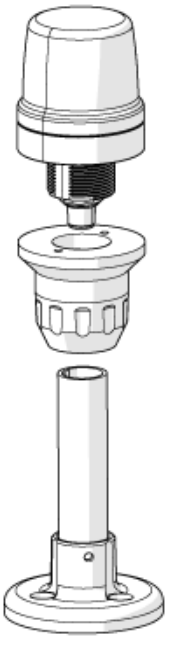

E89065

Mounting tube

LED-Tower/Pole/100mm

wall mounting

