OA5104

Retro-reflective sensor

OAR-FCKG

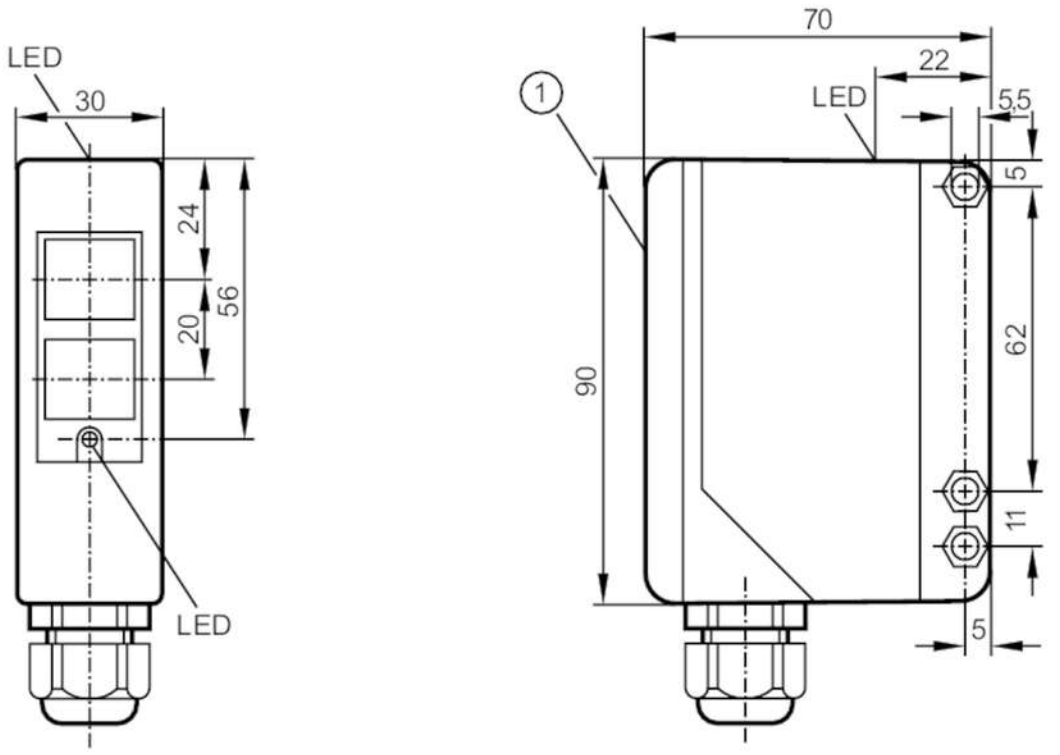

1 selection switch and potentiometer under cover
receiver in upper lens
transmitter in lower lens

Product characteristics		
Type of light		infrared light
Housing		rectangular
Application		
Special feature		Function check output
Function principle		Retro-reflective sensor
Electrical data		
Operating voltage	[V]	10...36 DC
Current consumption	[mA]	< 50
Protection class		II
Reverse polarity protection		yes
Type of light		infrared light
Wave length	[nm]	880
Outputs		
Electrical design		PNP/NPN
Output function		light-on/dark-on mode; (programmable)
Function check output		yes
Max. current load for function check output	[mA]	10

OA5104

Retro-reflective sensor

OAR-FCKG

Permanent current rating of switching output DC	[mA]	250	
Max. current load in dual output mode	[mA]	100	
Switching frequency DC	[Hz]	300	
Short-circuit protection		yes	
Type of short-circuit protection		pulsed	
Overload protection		yes	
Detection zone			
Range referred to prismatic reflector	[m]	0.25...10; (Prismatic reflector Ø 80 E20005)	
Range adjustable		yes	
Max. light spot diameter	[mm]	350	
Light spot dimensions refer to		at maximum range	
Operating conditions			
Ambient temperature	[°C]	-25...60	
Protection		IP 65	
Tests / approvals			
EMC		EN 60947-5-2	
		EN 55011	class B
MTTF	[years]	402	
Mechanical data			
Weight	[g]	284.5	
Housing		rectangular	
Dimensions	[mm]	90 x 30 x 70	
Materials		PPO modified	
Lens material		PMMA	
Lens alignment		side lens	
Displays / operating elements			
Display		switching status	1 x LED, yellow
		operation	1 x LED, green
		function	1 x LED, red
Accessories			
Items supplied		Angle bracket: 1, E20514	
		screwdrivers	
Remarks			
Pack quantity		1 pcs.	

OA5104

Retro-reflective sensor

OAR-FCKG

Electrical connection

terminals: ...1.5 mm²; Cable sheath: Ø 4.5...10 mm; Cable gland: M16 X 1.5

Connection

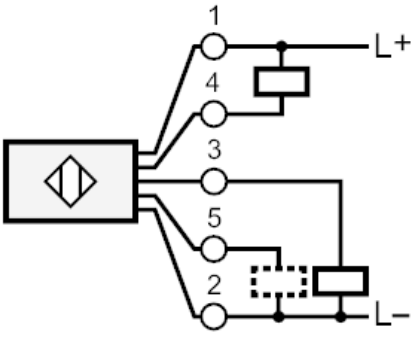

5	Function check output

Diagrams and graphs

excess gain graph

