

Cover for DIN Mounting Rail

Features

- Cover for DIN mounting rail
- Suitable for Power Bus
- Standard length 250 mm (9.84 inch), simple to customize to application space
- Packaging unit: 5 pieces

Function

The cover mounts onto the 35 mm DIN mounting rail. Thereby the DIN mounting rail will be protected from pollution. The contact with electrically conductive parts on DIN mounting rail will be prevented.

Dimensions

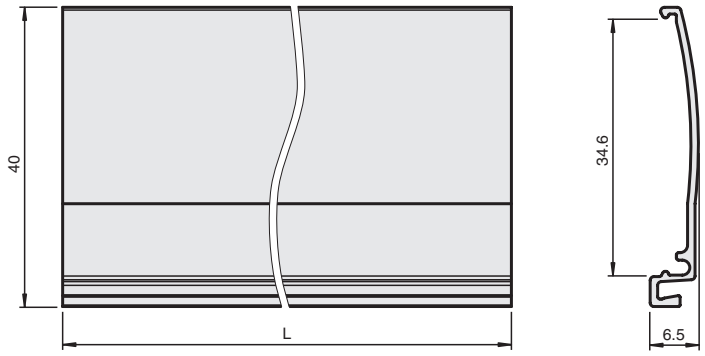

Technical data

Mechanical specifications	
Material	Polycarbonate
Mass	approx. 100 g
Dimensions	7.6 x 42.2 x 250 mm (0.3 x 1.66 x 9.84 inch)
Mounting	on 35 mm DIN mounting rail acc. to EN 60715:2001

Assembly

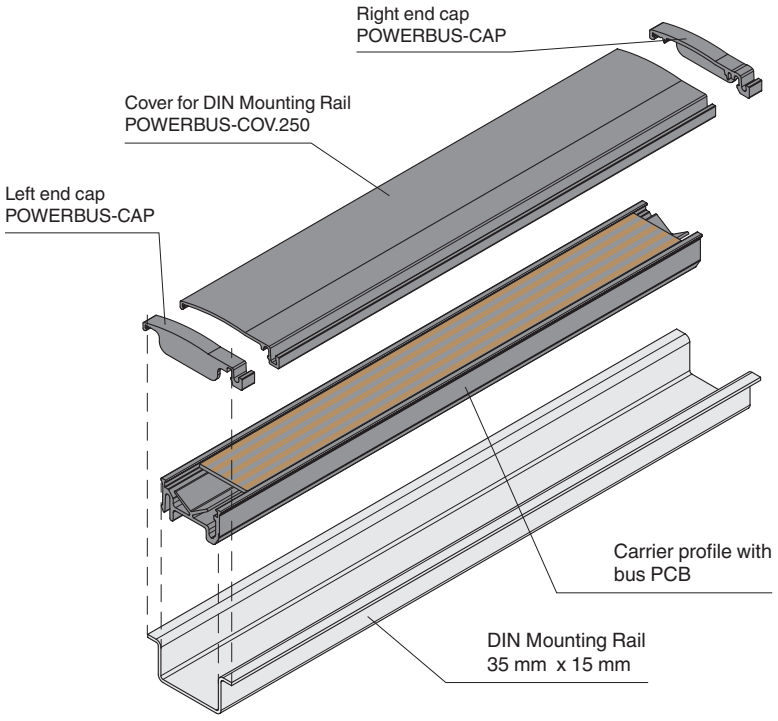

Release date 2016-09-12 14:57 Date of issue 2016-09-12 278541_eng.xml