Centrefeed Dispenser

M2

Elevation Design



Manufactured by Essity Hygiene and Health AB
SE-40503 Göteborg, Sweden
Visiting address: Mölndals Bro 2, Mölndal
www.essity.com, www.torkglobal.com
Patents/Brevets/Patentes: www.essity.com/patents
Distributed by
Essity Professional Hygiene North America LLC
Philadelphia, PA 19104
www.essity.com, www.torkusa.com
Made in Germany

Essity UK Limited
Southfields Road, Dunstable,
Bedfordshire, LU6 3EJ, UK

www.torkglobal.com

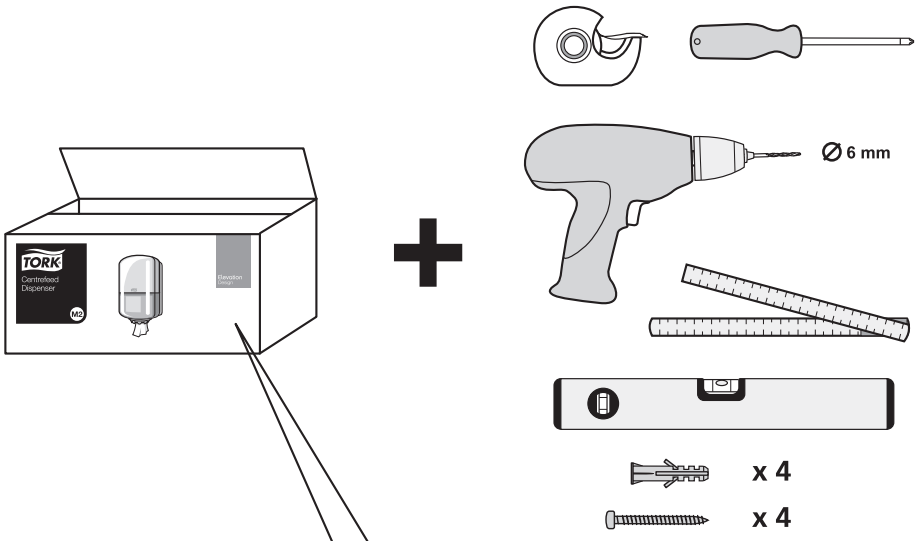
TORK
Centrefeed Dispenser
M2
Elevation Design
Ø 6 mm
x 4
x 4

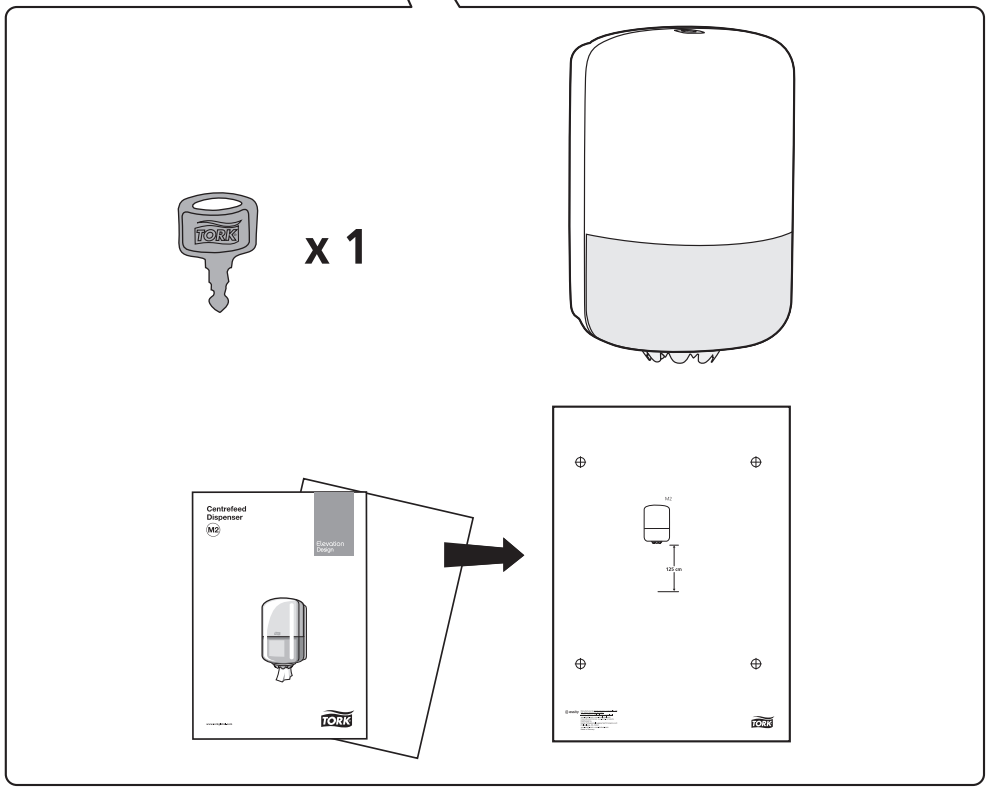
x 1
Centrefeed Dispenser
M2
Elevation Design
TORK

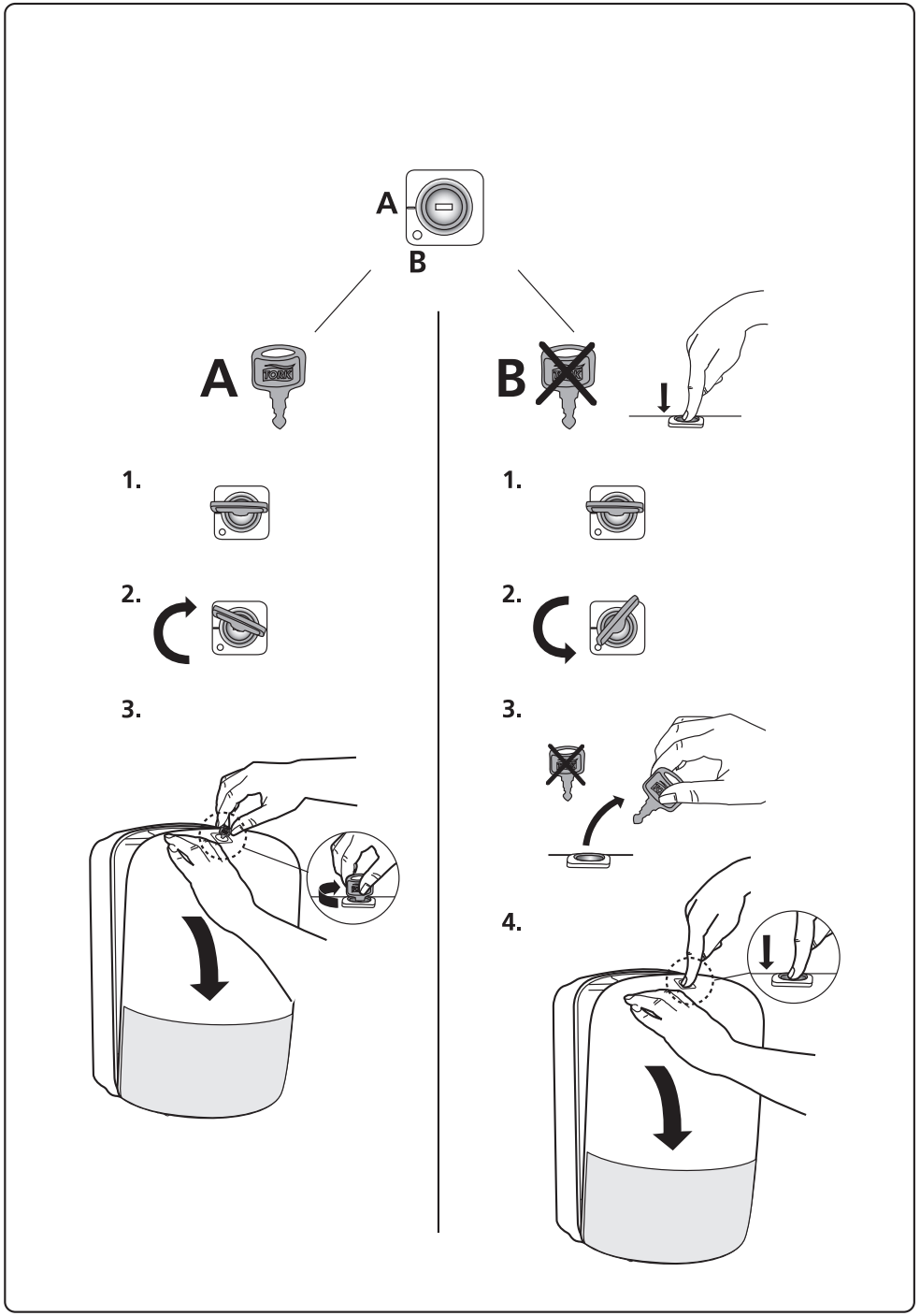
A
B
A
B
1.
2.
3.
1.
2.
3.
4.

3.

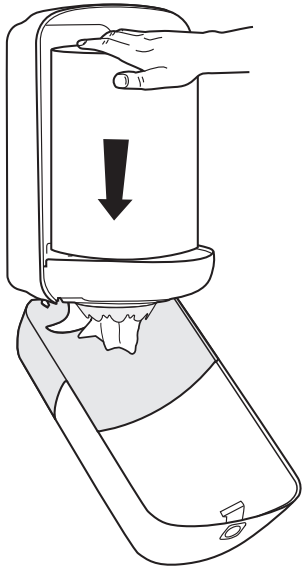

4.

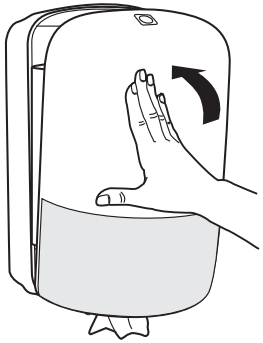

5.

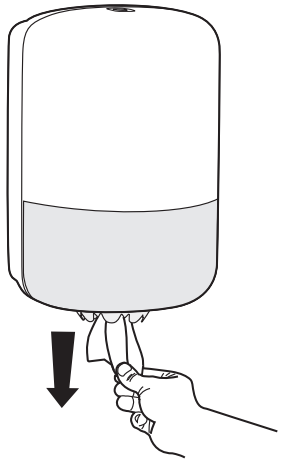

1.

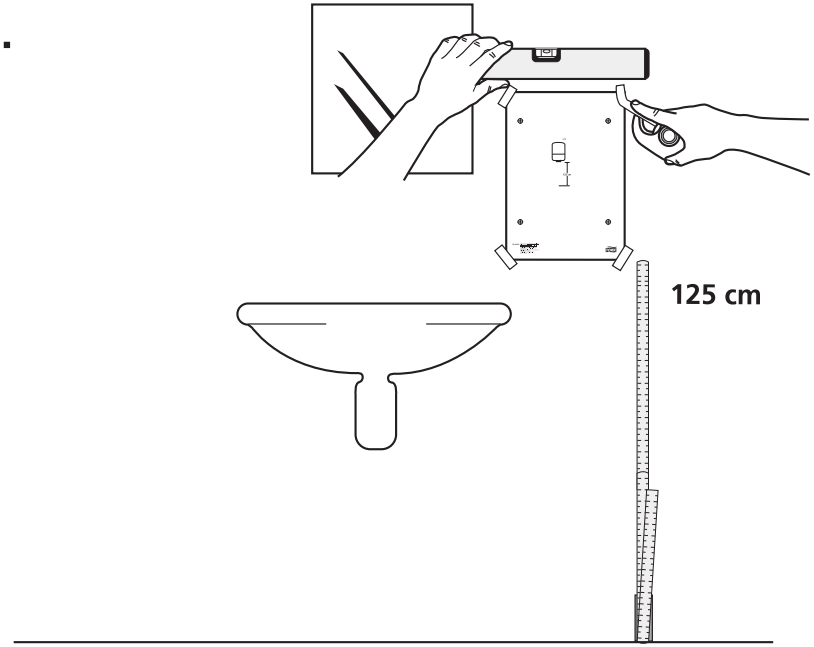

2.

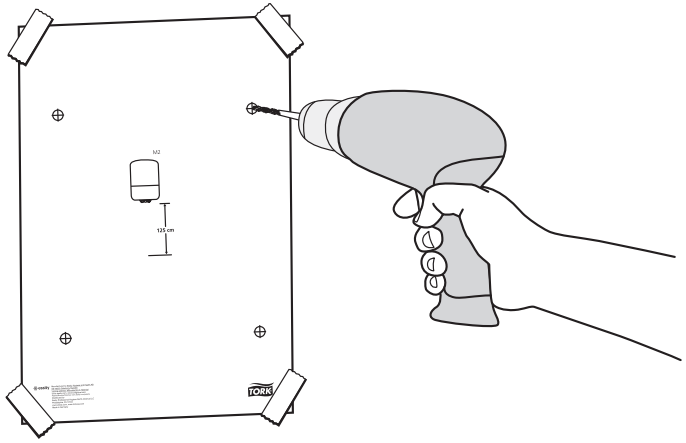

3.

x 4

x 4

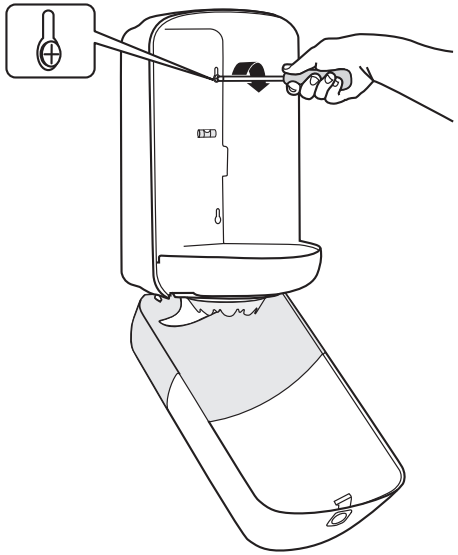

4.

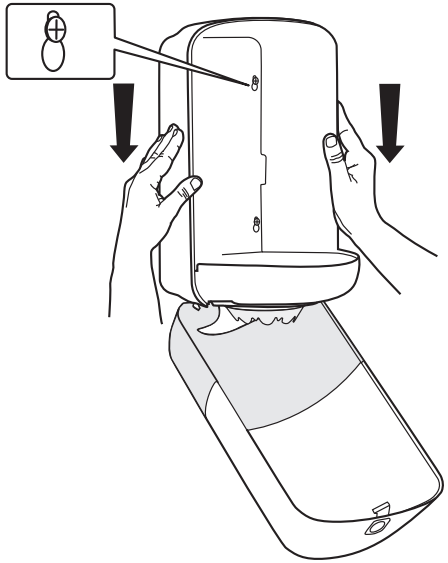

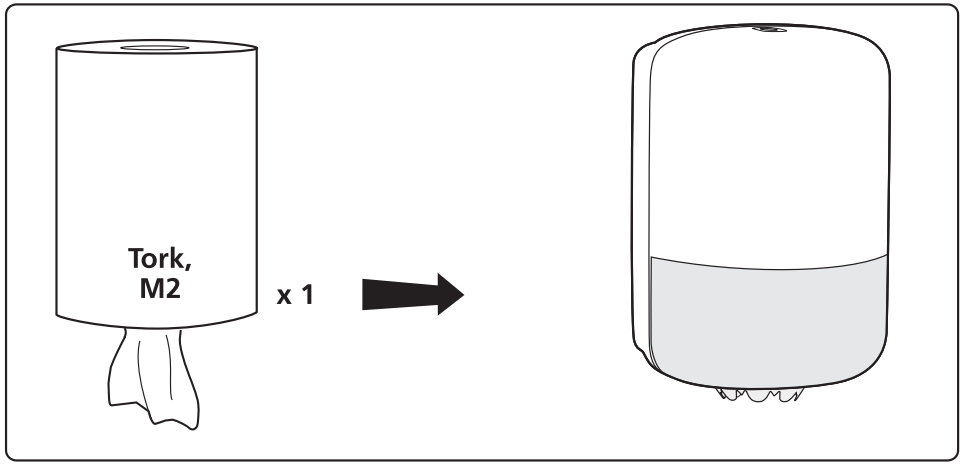

1.

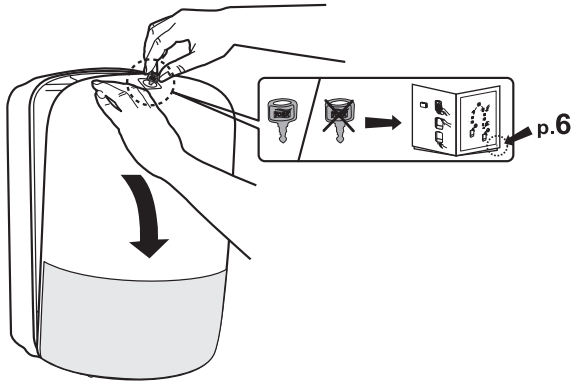

2.

